MINEX
An Evaluation-based Program for the Improvement of Minutiae Interoperability

MINEX II

An Assessment of ISO/IEC 7816 Card-Based Match-on-Card Capabilities

Patrick Grother and Wayne Salamon
NIST

July 2, 2007

Version History

June 29, 2007. This MOC test specification is a heavily revised version of the May 24 draft. It has been produced in response to the many comments received, and the decisions made at a NIST workshop. A short final comment period will close on July 5, 2007, and a final plan released on July 9. Please note the main changes: — Corrected card APDUs (sec. 8). — PC/SC card reader named (sec 6.3). — Adoption of modified Ongoing MINEX API (sec. 9). — Use of INCITS 378 templates with quality values as progenitors of ISO-CC templates (secs. 6.4 and 7.2). Abandon ISO-CC generation because ISO-CC doesn't have quality values. — Clarified intent of minutia quality values (sec. 7.2.2) — Refined text on how pruning proceeds (sec 10.4). — Allow template generator to return a center for pruning (sec. 10.4.4) In addition, NIST will shortly announce MINEX III, which will address the role of minutia quality in improving interoperability.
May 24, 2007. This interim version is available for comment until May 31, 2007. The changes from May 8 are shown in blue.
May 8, 2007. NIST is pleased to announce the availability of this draft evaluation plan. The entire content of this document is subject to revision. NIST specifically requests reviewers of the document to submit comments to the authors. These may include suggestions to add, subtract, or change its content.
March 12, 2007. NIST requested comments on the feasibility of MOC. NIST is most appreciative of the numerous, enthusiastic and helpful responses.

Provisional Timeline

Sept 24-28	Phase 2 submission period	Tentative
Mid September	Workshop to discuss Phase 1	
Sept 11-13	Biometrics Consortium, Baltimore MD	
Sept 6	Return of Phase 1 results to suppliers	
July 11 - Aug 23	NIST will accept applications to participate in Phase 1. This phase will include acceptance testing and execution of Phase 1 trials.	
July 11	Establishment of MINEX II website, http://fingerprint.nist.gov/minexII	
July 9	Final test plan	
July 5	End of comment period	
June 28	Release of draft test plan. NIST invites comments from interested parties.	
May 31	Comment period closes	Past
May 24	sBMOC Workshop at NIST	
May 9	First draft MINEX II, ISO-CC + MOC Test Plan	
March 29	Comment period closed	
March 12	MOC Concept document + RFP	

NOTE A workshop will be conducted prior to Phase 2 so that interested parties can discuss the findings of Phase 1 and Phase 2, where the different parties can discuss the issues identified in Phase 1.

Table of Contents

1. Overview 6
2. Scope 6
3. Normative References 7
4. Caution 8
4.1. Relationship between MINEX II and other issues 8
4.2. Relationship between MINEX II and Ongoing MINEX 8
5. Abbreviations 8
6. Aspects of the test 9
6.1. Match-on-card vs. match-off-card 9
6.2. Fundamental concept of the test 9
6.3. Generic interface hardware and software 9
6.4. INCITS 378:2004 vs. ISO/IEC 19794-2:2005 Compact Card 9
6.5. BIT Processing 10
6.6. Card-matcher combinations 10
6.7. Two phase testing 10
6.8. Options for participation 11
6.9. Three-way interoperability 11
6.10. Metrics 11
6.11. Participation 11
7. Profile of MINEX II templates 11
7.1. Overview 11
7.2. INCITS 378:2004 profile 12
7.3. ISO/IEC 19794-2:2005 compact card structure 13
7.4. Non-presence of a header 13
7.5. Minutia uniqueness 14
7.6. Failure to acquire 14
8. MOC interface specification 14
8.1. Overview 14
8.2. Approach to the use of ISO/IEC 7816 14
8.3. Establish Communications 14
8.4. Selection of the test application 14
8.5. Store enrollment template on the card 15
8.6. NIST read of the BIT 15
8.7. Verification 17
8.8. Reading card identifier 18
8.9. Reading matcher identifier 19
9. PC-based API specification 19
9.1. Overview 19
9.2. INCITS 378:2004 compliant templates 19
9.3. Submission 20
9.4. Testing interface 20
9.5. Software and Documentation 22
9.6. Runtime behavior 23
10. NIST conversion of I378 to ISO-CC templates 23
10.1. Background 23
10.2. Presence of BITs on card 23
10.3. Use of BITs 24
10.4. Number of minutiae 25
10.5. Sort order of minutiae 26
10.6. Ridge count, core and delta and zonal quality information 27
11. References 27
Annex A Comparison of the INCITS 378 and ISO/IEC 19794-2 standards 28
A.1 Syntactic differences 28
A.2 Semantic differences 28
A.3 Simulation protocol 29

A.4 Results after re-quantization of angle and position ... 30
A.5 Results after reduction in number of minutiae ... 30
A.6 Conclusions ... 31
Annex B Three-way interoperability ... 33
Annex C Input fingerprint image specifications ... 35
C.1 Format ... 35
C.2 Resolution and dimensions ... 35
C.3 Sensor and impression types ... 35
Annex D Error Codes and Handling ... 36
Annex E Predefined SDK Constants ... 37
E.1 Pre-defined values ... 37
Annex F Ambiguities in the standards ... 38
F.1 Compact card sorting ... 38
F.2 Unique minutia ... 38
F.3 No support for placing reference data on the card ... 38
Annex G ISO/IEC 19794-2:2005 record profile ... 39
Annex H Application to participate in MINEX II ... 41
H.1 Who should participate ... 41
H.2 How to participate ... 41
H.3 NIST activity ... 41
H.4 Points of contact ... 42
H.5 Access to MINEX II validation data ... 42
H.6 Access to MINEX II test data ... 43
H.7 Reporting of results ... 43
H.8 Return of the supplied materials ... 43
H.9 Agreement to participate ... 43
Annex I NIST mailing address ... 46

List of Figures

Figure 1 – Conversion of INCITS 378 to ISO-CC ... 24
Figure 2 - Use of INCITS 378 for simulation of ISO-CC accuracy ... 29
Figure 3 – Effect of minutia pruning on FNMR (above) and FMR (below) ... 32
Figure 4 – Native vs. Two-way vs. Three-way Interoperability ... 33
Figure 5 – Fingerprint image raster scan order ... 35

List of Tables

Table 1 – Family of MINEX evaluations ... 6
Table 2 – Abbreviations ... 8
Table 3 – MINEX II classes of participation ... 11
Table 4 – MINEX II profile of INCITS 378:2004 standard ... 12
Table 5 – MINEX II profile of ISO/IEC 19794-2:2005 standard ... 13
Table 6 – ISO/IEC 19794-2 minutiae template DO ... 13
Table 7 – Command APDU for selection of MOC application ... 14
Table 8 – Response APDU from selection of MOC application ... 14
Table 9 – Command APDU for storage of reference template ... 15
Table 10 – Response APDU from storage of reference template ... 15
Table 11 – Command APDU for retrieval of biometric information template ... 15
Table 12 – Response APDU from retrieval of biometric information template ... 15
Table 13 - ISO/IEC 19794-2 Biometric Information Template ... 16
Table 14 – Command APDU for comparison of biometric templates ... 17
Table 15 – Response APDU from comparison of biometric templates ... 17
Table 16 – Command APDU for retrieval of verification similarity score ... 18
Table 17 – Response APDU for retrieval of verification similarity score ... 18
Table 18 – Command APDU for retrieval of Card identifier ... 18

Table 19 – Response APDU for retrieval of Card identifier 19
Table 20 – Command APDU for retrieval of Matcher identifier 19
Table 21 – Response APDU for retrieval of Matcher identifier 19
Table 22 – NFIQ Mappings 20
Table 23 – MINEX create_template API Function 20
Table 24 – MINEX API match_templates function 21
Table 25 – MINEX API get_pids function 21
Table 26 – Minutia encodings of the ISO-CC and INCITS 378 28
Table 27 – Minutia location quantization of ISO-CC and INCITS 378 templates 28
Table 28 – Minutia angle quantization of ISO-CC and INCITS 378 templates 28
Table 29 – Source code for conversion of INCITS 378 to ISO-CC 29
Table 30 – Relative accuracy of ISO-CC and INCITS 378 templates (Fixed FMR) 30
Table 31 – Relative accuracy of ISO-CC and INCITS 378 templates (fixed t) 30
Table 32 – MINEX API return codes 36
Table 33 – MINEX API predefined values 37
Table 34 - ISO/IEC 19794-2 and ISO/IEC 7816-11 finger position codes 37
Table 35 – MINEX II profile of ISO/IEC 19794-2:2005 standard 39
Table 36 – ISO/IEC 19794-2 minutiae template DO 39
Table 37 – Zonal quality data 40

Acknowledgements

The authors are grateful to the following contributors, and other anonymous individuals, without whose input this document would not have been concluded.

A

B …

1. Overview

The MINEX program is intended to improve template-based interoperability from the state reported in MINEX 04[1] and MTIT[2] toward that achievable with image-based implementations. The approach is to conduct several trials, MINEX II, III, IV etc, each of which will embed development, evaluation, targeted feedback and consultation activities between NIST, industry and other interested parties. Within scope is anything to do with fingerprint minutiae as an interoperable biometric for identity management. Typical outcomes will be measurements of accuracy, processing time, template size, proposals to revise the relevant standards, studies of utility of quality measures, calibration information, and new metrics.

Table 1 gives an overview of the various MINEX activities at NIST, and a context for future work, starting with MINEX II.

Table 1 – Family of MINEX evaluations

MINEX I (MINEX 04[1])	This test was conducted as an initial comparison of image vs. minutia-based interoperability. It assessed the core algorithmic ability of fingerprint matcher Z to compare minutiae templates from sources X and Y. It compared that case with fully proprietary templates on the same sets of archival data. The test adopted the INCITS 378 template as a base standard. The test is now closed. http://fingeprint.nist.gov/minex04
Ongoing MINEX[3]	Ongoing MINEX is a continuing program of interoperability assessment intended to measure conformance and interoperability of INCITS 378:2004 samples. The test uses one expanded partition of the MINEX 04 data to formulate interoperable groups of matchers and template generators. One client of Ongoing MINEX is the US Government's PIV program which has its own set of criteria against which the interoperable group is formed. The test results are available to other applications or programs which may elect to set their own criteria for interoperable performance. The test remains open.
MINEX II	MINEX II will consider Match-on-Card capabilities using ISO/IEC 19794-2 compact card templates. These will be produced from parent INCITS 378:2004 records. In addition, because NIST considers the compact-card template small enough to be rapidly read *from* a card, the study may be useful for organizations considering Match-off-Card applications. The test design is in the closing stages: This document describes MINEX II and is open for comment. Readers should not consider any of the content as final.
MINEX III	A future program, to be announced in the summer 2007, will return to the issue of core minutia interoperability. The scope is yet to be finalized, but it is likely to focus on development and exploitation of the minutia quality value.

2. Scope

MINEX II is intended to measure the core algorithmic capabilities of fingerprint matching algorithms running on standardized ISO/IEC 7816 smart cards. Specifically the test will

- instantiate a mechanism for MOC testing,
- measure the accuracy of match-on-card (MOC) implementations using ISO/IEC 19794-2:2005 compact card minutiae templates,
- time the various operations,
- test the viability of INCITS 378 to ISO/IEC 19794-2 compact card transcoding,
- formulate comments toward possible revision of the relevant standards, and

[1] Minutiae Interoperability Exchange Test, MINEX, NIST Interagency Report 7296, March 21, 2006.
[2] Minutiae Template Interoperability Testing, http://www.mtitproject.com
[3] See the Ongoing MINEX Homepage at http://fingerprint.nist.gov/minex

- test conformance to the INCITS 378:2004 record format, as profiled herein.

The primary outputs of the test will be statements of performance using the following metrics.

- False non-match and false match error rates,
- Off-card template generation times,
- On-card matching times.

In so doing, this evaluation

- requires production of INCITS 378:2004 templates, and
- uses NIST's open-source transcoder to convert INCITS 378:2004 templates to ISO/IEC 19794-2 compact card format for matching,

Not in the scope of this evaluation, but the subject of a separate activity[4] at NIST is:

- securing the communications channel, including cryptographic protection of the biometric templates;
- template integrity protection using digital signatures;
- authentication of the card to the reader;
- contactless communications;

The following are specifically not within the current scope of this evaluation:

- The ISO/IEC 19794-2 "record" and "card normal" templates,
- Ridge count, core and delta, and zonal quality extensions,
- Non-standard extensions to any standardized minutia format,
- Evaluation of readers, including performance, conformance and interoperability,
- Evaluation of ruggedness or durability of the card,
- On-card template generation (i.e. extraction of minutiae from images),
- Template update or adaptation,
- Although the test will use ISO/IEC 7816 parts 4 and 11, and conformance to this subset will be a requirement, this study does not constitute a formal test of conformance to any part of ISO/IEC 7816, and
- Devices not conforming to ISO/IEC 7816, including all sense-on-card devices that embed proprietary template formats.

3. Normative References

The following referenced documents are indispensable for the application of this document. For dated references, only the edition cited applies. For undated references, the latest edition of the referenced document (including any amendments) applies.

- INCITS 378:2004 — American National Standard for Information Technology — Finger Minutiae Format for Data Interchange
- ISO/IEC 7816-4:2005 — Identification cards — Integrated circuit cards — Part 4: Organization, security and commands for interchange
- ISO/IEC 7816-6:2005 — Identification cards — Integrated circuit cards — Part 6: Interindustry data elements for interchange
- ISO/IEC 7816-11:2004 — Identification cards — Integrated circuit cards — Part 11: Personal verification through biometric methods
- ISO/IEC 19794-2:2005 — Information technology — Biometric data interchange formats — Part 2: Finger minutiae data

[4] See documents linked from here: http://csrc.nist.gov/piv-program/

- ISO/IEC 19794-2:2005/Cor.1:2007 — Information technology — Biometric data interchange formats — Part 2: Finger minutiae data – Technical Corrigendum 1 (first draft, JTC001-SC37-N-2119, circulated May 2007)
- ISO/IEC 19785-3:2005 — Common biometric exchange formats framework — Part 3: Patron format specifications (FDIS draft, JTC001-SC37-N-2163, circulated June 6, 2007)
- ISO/IEC FCD 19795 — Biometric Performance Testing and Reporting — Part 4: Interoperability Performance Testing.

4. Caution

4.1. Relationship between MINEX II and other issues

Neither this document, nor any future execution of MINEX or MOC evaluations by NIST, should be construed as an indication that NIST, nor any other agency of the United States government, has decided for or against the inclusion or exclusion of the items listed below in any current or future government specification or program.

- Contactless biometric interfaces,
- MOC implementations,
- ISO/IEC 19794-2 formats, and
- Definitive formats for standardized templates to be stored on, or transmitted to, cards.

This document is strictly a special notice that is being published to reach a wider audience. It is not a federal procurement action, and no RFQ or RFP is available.

In addition, the identification of any commercial product or trade name does not imply endorsement or recommendation by the National Institute of Standards and Technology.

4.2. Relationship between MINEX II and Ongoing MINEX

MINEX II will include the use the same corpus of nearly 750000 images as is used in the Ongoing MINEX process. MINEX II will be conducted in two phases. For reasons of timeliness, Phase I is likely to consider only a subset of those images, and will only examine native or limited cross-vendor template interoperability. Phase II will extend the operation toward full interoperability testing, including the kind examined in Ongoing MINEX. Phase II may also employ an expanded set of images or comparison counts.

5. Abbreviations

The abbreviations and acronyms of Table 2 are used in many parts of this document.

Table 2 – Abbreviations

APDU	Application Protocol Data Unit as used in ISO/IEC 7816-4
BIT	Biometric Information Template as defined in ISO/IEC 7816-11
IDMS	Identity management system
FMR	False match rate
FNMR	False non-match rate
INCITS	InterNational Committee on Information Technology Standards
ISO/IEC 7816	Multipart standard for "Identification cards - Integrated circuit(s) cards with contacts"
ISO/IEC 19794	Multipart standard of "Biometric data interchange formats"
I378	INCITS 378:2004 as profiled in this standard
ISO-CC	The compact card minutia format of clause 8 in ISO/IEC 19794-2:2005
MINEX	Generic name for the series of NIST's Minutia Interoperability Exchange Tests
MOC	Match on card
MXC	Match off card
NIST	National Institute of Standards and Technology
PC/SC	Generic interface specification for PC to smart card connectivity
SC 17	Subcommittee 37 of Joint Technical Committee 1 – developer of smart card standards

SC 37	Subcommittee 37 of Joint Technical Committee 1 – developer of biometric standards
SDK	The term Software Development Kit refers to any library software submitted to NIST

6. Aspects of the test

6.1. Match-on-card vs. match-off-card

The MINEX II test is specifically aimed at testing the efficacy of match-on-card (MOC) implementations that compare instances of ISO/IEC 19794-2:2005 compact card (ISO-CC) templates. Thus, one use of MINEX II would be to confirm that performance achieved by a MOC submission to Ongoing MINEX (an off-card process) is actually achievable on at least one ISO/IEC 7816 card.

The MINEX II study is initiated in response to near-term imperatives to evaluate the technology.

The test is likely to require somewhat customized cards (i.e. not production cards), at least because of the requirement to be able to read similarity scores from the card.

6.2. Fundamental concept of the test

The MOC capability shall be tested in three stages:

- In stage 1, NIST will measure the accuracy of the matching algorithm executing on a PC class machine. The test requires submission of a Pentium-class implementation of the same MOC algorithm[5]. This stage is likely to embed hundreds of thousands of genuine and impostor comparisons to support the accuracy measurement goals of the MINEX tests.
- In stage 2, NIST will repeat a small subset of the stage 1 template comparisons on the card. Selected genuine and impostor comparisons will be repeated on the card by successively storing reference templates on the card and sending verification templates to the card for comparison.
- In stage 3, NIST will compare similarity scores retrieved from the card in stage 1 with those generated in stage 3. For any given pair of reference and verification templates, they must be identical.

This three-stage strategy assures NIST that the accuracy of the MOC implementation is identical to that of the PC-based version of the algorithm, and that the card itself is truly capable of running at the measured accuracy.

6.3. Generic interface hardware and software

NIST intends to access all cards via third party PC/SC hardware owned by NIST. NIST will use the SCR SCM335[6] reader[7], and the M.U.S.C.L.E open-source drivers[8] under Linux.

NIST does not currently intend to use other card readers, but reserves the right to do so for any purpose.

As in previous tests, NIST intends to run the PC-based portions of the test using software components implementing a simple "C" API.

6.4. INCITS 378:2004 vs. ISO/IEC 19794-2:2005 Compact Card

In MINEX II, NIST requires submitted template generators to produce INCITS 378:2004 templates, as profiled in section 7.2 of this document. NIST will convert such templates to ISO/IEC 19794-2:2005 compact card instances before passing them to PC-based and card-based matching algorithms. Conversion will be done on-the-fly and will be parameterized per the BITs read from the target smart card.

[5] While NIST understands that the PC-based matcher submission may need to use only fixed-point arithmetic, or run underneath an emulator, we do not address means of assuring equivalence of on and off card implementations.
[6] Specific hardware and software products identified in this plan will used in order to perform the evaluations described in this document. In no case does identification of any commercial product, trade name, or vendor, imply recommendation or endorsement by the National Institute of Standards and Technology, nor does it imply that the products and equipment identified are necessarily the best available for the purpose.
[7] The reader is documented at http://www.scmmicro.com/security/view_product_en.php?PID=11.
[8] See driver software homepage is http://www.linuxnet.com/middle.html

NIST is not requiring production of ISO-CC templates because the following points hold.

- Three-byte ISO-CC minutia points are strict "semantic children" of six-byte INCITS 378:2004 or ISO/IEC 19794-2:2005 record format minutia points.
- The process of conversion of INCITS 378:2004 to ISO-CC is trivial and mostly standardized, and that there is no additional intellectual property needed to compute an ISO-CC template vs. an I378 template.
- Minutia quality values are required entries in INCITS 378:2004 minutiae records.
- Minutia quality values are required when preparing ISO-CC templates for MOC.
- The quality field of I378 is considered an essential mechanism for improving minutia-based interoperability from the state measured in MINEX and MTIT.
- ISO-CC templates can exist only as terminal objects, i.e. they cannot be used in the preparation of other standardized minutia records.

With regard to issues of minutia selection and placement, NIST draws the attention of template generator developers to the German national body contribution, N2135, submitted to SC 37 Working Group 3 on May 29, 2007.

6.5. BIT Processing

NIST will read two ISO/IEC 7816-11 BITs from each submitted card as a group (see the card APDU in section 8.6). These parameterize the conversion of I378 templates to ISO-CC templates before they are sent to

- card based MOC matcher implementations, and
- PC-based MOC match implementations.

6.6. Card-matcher combinations

The primary objective of MINEX II is to ascertain MOC capability by measuring fingerprint algorithm accuracy in the intended environment (i.e. the card). NIST considers that card vendors may elect to team with several fingerprint algorithm vendors, and vice versa. NIST further expects that a fingerprint supplier's technology may demonstrate improved accuracy when implemented on a more capable card.

NIST seeks to identify the most capable components and combinations of components and therefore the participation agreement, Annex H, requires identification of all card and fingerprint technology suppliers, with responsible signatories from all collaborating organizations.

6.7. Two phase testing

NIST is likely to conduct the test in two phases. The first is intended to be a smaller and faster evaluation of submitted software and cards that

- will use a reduced number of images,
- or only a subset of all interoperability paradigms (see section 6.9),
- will give feedback and results to the suppliers, and
- is not intended to include release of results to the sponsors or the public.

The second phase will be the full size test and will result in a final public report. The Phase 2 report will

- contain the names of Phase 1 participants,
- not contain the results from Phase 1 participants' implementations,
- contain the names of Phase 2 participants, and
- contain the results of all Phase 2 participants' implementations.

NIST is particularly interested in facilitating improved performance between Phase 1 and Phase 2. It intends to provide feedback to suppliers and to allow submission of improved software and hardware. NIST solicits comment on what feedback (metrics, data, or calibration information) would be most useful.

6.8. Options for participation

For phase 1, participants must provide the components identified in one or more rows of Table 3. All components in a row shall be supplied. Up to four submissions (e.g. 3 class A + 1 class B) are permitted to allow

- card suppliers to team with several suppliers of fingerprint template generators, and vice versa, and
- suppliers to submit, say, fast-but-inaccurate and slow-but-accurate versions.

Table 3 – MINEX II classes of participation

Class of Participation	Annex H Participation agreement	ISO/IEC 7816 Card + Matcher	PC-based ISO-CC Template Matcher	PC-based INCITS 378:2004 Template Generator
Class A	+	+	+	
Class B	+	+	+	+

These classes of participation may be revised for Phase II, and NIST remains open to requests to add or subtract some classes of participation.

6.9. Three-way interoperability

NIST anticipates that some cards embed fingerprint matchers that are not accompanied by an associated template generator, and may well be used with enrollment and verification templates coming from two different sources. That is card-based matcher, M, will compare a reference template produced by X with a verification template from Y. NIST intends to evaluate three-way interoperability in Phase 2 of this test. The possible implications for accuracy are discussed in Annex B.

6.10. Metrics

NIST intends to report full DET characteristics for all implementations tested. The DET is primary mechanism for transferring the accuracy results of evaluations into the technology policy arena (e.g. in order to establish security requirements).

In addition, in the full-size Phase 2 trial, NIST intends to report performance interoperability matrices[9]. Such tables will report false non-match rates at fixed false match rates of 0.001 as the primary figure of merit[10].

NIST will measure and report estimates of the elapsed times of at least the

- template generation process,
- on-card and off-card template comparisons, and
- the storage of the reference template on the card.

6.11. Participation

Prospective participants should read this document then complete the application form, Annex H.

7. Profile of MINEX II templates

7.1. Overview

All template generators submitted under the MINEX II program shall produce an INCITS 378:2004 template, as defined in section 7.2. This is specified because a valid minutia quality is required in the preparation of the section 7.3 ISO-CC templates sent to the matchers.

[9] Like Table 8 of NIST Interagency Report 7296 *Performance and Interoperability of the INCITS 378 Template*.
[10] NIST is likely to conduct more impostor comparisons than in prior MINEX tests to improve significance.

7.2. INCITS 378:2004 profile

7.2.1. Record structure

Template generators shall produce records conformant to Table 4. This is identical to the Ongoing MINEX profile[11] except that

- the minutia quality field shall be meaningfully populated[12],
- the IBIA vendor code field shall be populated,
- the version number IDs shall be populated.

Table 4 – MINEX II profile of INCITS 378:2004 standard

	Section title and/or field name (I378 clause numbers in parentheses)	Values Allowed	Informative Remarks
1.	Format Identifier (6.4.1)	0x464D5200	i.e. ASCII "FMR\0"
2.	Version Number (6.4.2)	0x20323000	i.e. ASCII " 20\0".
3.	Record Length (6.4.3)	$32 \leq L \leq 800$	26 record header + 4 view header +2 extended data length + 6K. Max K is 128
4.	CBEFF Product Identifier Owner (6.4.4)	> 0	Two byte, IBIA registered, vendor ID.
5.	CBEFF Product Identifier Type (6.4.4)	> 0	Two byte, vendor assigned, version number.
6.	Capture Equipment Compliance (6.4.5)	0	
7.	Capture Equipment ID (6.4.6)	0	
8.	Size of Scanned Image in x direction (6.4.7)	MIT	Inherited directly from input data
9.	Size of Scanned Image in y direction (6.4.8)	MIT	
10.	X (horizontal) resolution (6.4.9)	197	
11.	Y (vertical) resolution (6.4.10)	197	
12.	Number of Finger Views (6.4.11)	1	
13.	Reserved Byte (6.4.12)	0	
14.	Finger Position (6.5.1.1)	MIT	Inherited directly from input data (see 9.4.2)
15.	View Number (6.5.1.2)	0	
16.	Impression Type (6.5.1.3)	0 or 2	Inherited directly from input data
17.	Finger Quality (6.5.1.4)	MIT	Inherited directly from input data
18.	Number of Minutiae (6.5.1.5)	$0 \leq K \leq 128$	K minutiae data blocks
19.	Minutiae Type (6.5.2.1)	01b, 10b, or 00b	
20.	Minutiae Position (6.5.2.2)	MIT	
21.	Minutiae Angle (6.5.2.3)	MIT	
22.	Minutiae Quality (6.5.2.4)	0, $1 \leq Q \leq 100$	0 = unsupported
23.	Extended Data Block Length (6.6.1.1)	0	No bytes shall follow this field.
MIT = mandatory at time of instantiation			

7.2.2. Minutia quality values

The use of a minutia quality value is normatively required by clause 8.3.1 of ISO/IEC 19794-2:2005 for the preparation of ISO-CC templates, as described later in section 10.4.3.

For MINEX II, the template generator shall generate quality values that are indicative that a minutia is a true minutia. That is, larger values shall indicate decreased likelihood that the minutia is a false minutia. This requirement is specifically distinct from one in which the quality value would be indicative of, for example, the local noise in the original image.

MINEX III will be a cooperative project to develop minutia quality implementations.

[11] The Ongoing MINEX profile is that given in Table 11 of NIST Special Publication 800-76-1.
[12] The operational PIV profile given Table 3 of NIST Special Publication 800-76-1 requires the minutia quality field to be supplied per I378. However all existing minutia standards gives poor guidance on what quality means.

7.2.3. ID values

The ID values will be used for internal NIST logging. The version numbers should be distinct between any versions which offer different algorithmically functionality.

7.3. ISO/IEC 19794-2:2005 compact card structure

This section defines precisely what constitutes the data to be sent to PC-based and card-based MOC implementations. It is included here because ISO/IEC 19794-2:2005 and its draft corrigenda and revisions define multiple templates combining

- three encodings (record, card-normal, card-compact),
- versions with and without headers[13],
- variants differing in their minutia placement semantics,
- presence of standardized extended data (zonal quality etc), and
- presence of non-standard, proprietary, extended data.

The MINEX II evaluation will use ISO-CC templates for which

- the record and view headers shall be absent,
- standardized extended data shall be absent, and
- proprietary extended data shall be absent.

NIST will convert the I378 instances of Table 4 to produce Table 5 instances of ISO-CC. This process is described in section 10.

Table 5 – MINEX II profile of ISO/IEC 19794-2:2005 standard

1.	X coordinate	8	[0,255]	Expressed in units of 0.1 mm	View data S instances of the minutiae data on lines 17-20 shall be present
2.	Y coordinate	8	[0,255]	Expressed in units of 0.1 mm	
3.	Minutiae type	2			
4.	Minutiae angle	6	[0,63]	Resolution is 5.625 degrees	

MOC implementations shall accept templates in the TLV format of Table 6.

Table 6 – ISO/IEC 19794-2 minutiae template DO

Tag	L	Value					
‘7F2E’	L1	Biometric data template					
		Tag	L	Value			
		‘81’	L2	Finger minutiae data			
				Field	Size (bits)	Valid Values	
				X coordinate	8	[0,255]	S instances
				Y coordinate	8	[0,255]	
				Minutiae type	2		
				Minutiae angle	6	[0,63]	

7.4. Non-presence of a header

NIST has abandoned plans to require the minutiae data to be preceded by a four byte view header. These plans were advanced in versions of this document circulated before May 26 2007. However, see also section F.3 for a comment regarding standardization.

[13] Working Group 3 of SC 37 discussed this issue in its January 2007 meeting in New Zealand.

7.5. Minutia uniqueness

A non-ISO requirement is for the minutia points to be unique. Template generators submitted in MINEX II shall output unique (x, y, and theta) tuples and NIST will implement checks to detect deviations from such behavior. This requirement is instituted because non-uniqueness impedes some matching algorithms.

7.6. Failure to acquire

Template generators in MINEX evaluations must always produce a Table 4 template, even if no minutiae are found. Such a template will have length 26 bytes, and the value in the "number of minutiae" field shall be 0. NIST considers this a valid template. It is useful for correct accounting of template generator failure (see MINEX NIST IR 7296 http://fingerprint.nist.gov/minex04/minex_report.pdf section 5.3).

8. MOC interface specification

8.1. Overview

The following subsections define the mechanism by which ALL cards shall be accessed for this test. This includes selection of the application, reading and use of the Biometric Information Template (BIT), installation of a reference template, verification, recovery of similarity scores, and retrieval of identifiers.

The template generation function, including use of the BIT, shall be conducted on PC-class computers.

8.2. Approach to the use of ISO/IEC 7816

The following subsections detail the MINEX II MOC interface. It was designed with the following criteria in mind.

- Adherence to the provisions of ISO/IEC 7816-4:2005, 7816-11:2004 and 19794-2:2005.
- When the base standards provide for optional content this specification follows NIST Special Publication 800-73-1 Interfaces for Personal Identity Verification.
- To only define new elements when extant standards are silent on a necessary functionality.

The impact of the second provision is to select odd byte INS values.

8.3. Establish Communications

An Answer-to-Reset shall be performed to determine (T=0, T=1 or T=CL).

8.4. Selection of the test application

This card shall be supplied with a dedicated NIST MOC testing application. It shall be invoked once by using the SELECT command in Table 7. The response shall be as in Table 8.

Table 7 – Command APDU for selection of MOC application

Command Parameter	Required Value	Meaning
CLA INS P1-P2	‘00’ ‘A4’ ‘04 0C’	 SELECT AID follows, 1100b
L_c field	16	Length of AID
Data field	'F0 4E 49 53 54 20 4D 4F 43 20 54 53 54 20 50 31'	AID In ASCII, "≡NIST MOC TST P1 " where P1 connotes Phase 1
L_e field	Absent	

Table 8 – Response APDU from selection of MOC application

Response Parameter	Meaning
Data field	Empty
SW1-SW2	See ISO/IEC 7816-4:2005

8.5. Store enrollment template on the card

The APDU for replacing the template on the card is shown in Table 9. It uses the PUT DATA instruction to overwrite the existing reference template.

Table 9 – Command APDU for storage of reference template

Command Parameter	Required Value	Meaning
CLA INS P1-P2	‘00’ ‘DB’ '3F FF'	 PUT DATA Store anywhere in the current Dedicated File (Application DF)
L_c field	Length of command data field	
Data field	Table 6	Data Object in BER-TLV format to be stored (tag '7F 2E')
L_e field	Empty	

Table 10 – Response APDU from storage of reference template

Response Parameter	Meaning
Data field	Empty
SW1-SW2	See ISO/IEC 7816-4:2005

Note that finger position data is not included, because no standard regulates its transmission. In any case, NIST will only conduct comparisons of same-finger templates.

NIST considers that the lack of a standard here impedes at least testing, and probably operational issuance systems - see Annex F.

8.6. NIST read of the BIT

NIST will use the command of Table 11 to retrieve the BIT group template of Table 13 per the response of Table 12. In accordance with the suggestion in Annex D of ISO/IEC 19794-2, NIST seeks to provide asymmetric enrollment and verification templates. This supports, for example, more minutiae in the reference template than in the verification template. However, NIST will not pass these parameters to the template generator so the PC-based API still only contains a generic create_template function call which does not differentiate between enrollment and verification (see sec. 9.4.2). Instead, this will occur during a pre-match post-processing of the template.

Table 11 – Command APDU for retrieval of biometric information template

Command Parameter	Required Value	Meaning
CLA INS P1-P2	‘00’ ‘CB’ '3F FF'	 GET DATA Retrieve from anywhere in the current Dedicated File (Application DF)
L_c field	'04'	
Data field	'5C' '02' '7F 61'	 Data Object identifier to be retrieved (group of BIT)
L_e field	‘00’	

Table 12 – Response APDU from retrieval of biometric information template

Response Parameter	Meaning
Data field	Biometric Information Template (see Table 13)
SW1-SW2	See ISO/IEC 7816-4:2005

Table 13 therefore contains two BITs. The first BIT shall apply to the enrollment template. The second BIT shall apply to the verification templates. These shall be grouped together as a BIT group template. NIST will read the group of two BITs from each submitted card, and store it. NIST is likely to conduct this read operation only once, but will use the BITs to parameterize all templates conversion operations prior to sending templates to the card or to the PC-based software matcher.

All instances of a submitted card must have the same BITs. The BIT must contain the data as described in Table 13.

Table 13 - ISO/IEC 19794-2 Biometric Information Template

Tag	Len.	Value									NIST
'7F61'	Var.	BIT group template									Requirements
		Tag	Len.	Value							
		'02'	1	Number of BITs in the group							2
		'7F60'	Var.	Biometric Information Template (BIT)							For enrollment
				Tag	Len.	Value					
				'A1'	Var.	Biometric Header Template (BHT) conforming to ISO/IEC 19785-3:2005					
						Tag	Len.	Value			
						'81'	1	08 biometric type (08 = fingerprint)			
						'82'	1	XX biometric subtype (finger position) These values shall be from 7816-11 table (and 19785) and NOT from 19794-2			See NOTE below
						'87'	2	CBEFF BDB format owner			0101 i.e. JTC1/SC37
						'88'	2	CBEFF BDB format type			0005 see sec. 8.6.1
						'B1'	Var.	Biometric matching algorithm parameters ISO/IEC 19794-2 Table 14			
								Tag	Len.	Value	
								'81'	2	Min. and max. numbers of minutiae, see ISO/IEC 19794-2 (subclause 8.3.3, Table 10)	See sec. 0
								'82'	1	Minutiae order, see ISO/IEC 19794-2 (subclause 8.3.4 and Table 11 and 12)[14]	Native, see sec. 10.5
								'83'	1	Feature handling indicator, see ISO/IEC 19794-2 (Table 15)	00000000b and see sec. 10.6
		'7F60'	Var.	Biometric Information Template (BIT)							For verification
				Tag	Len.	Value					
				'A1'	Var.	Biometric Header Template (BHT)					
						Tag	Len.	Value			
						'81'	1	08 biometric type (08 = fingerprint)			
						'82'	1	XX biometric subtype (finger position) These values shall be from 7816-11 table (and 19785) and NOT from 19794-2			See NOTE below
						'87'	2	CBEFF BDB format owner			0101 i.e. JTC1/SC37
						'88'	2	CBEFF BDB format type			0005 see sec. 8.6.1
						'B1'	Var.	Biometric matching algorithm parameters ISO/IEC 19794-2 Table 14			
								Tag	Len.	Value	
								'81'	2	Min. and max. numbers of	See sec. 0

[14] The text in this line is a corrected version of that in ISO/IEC 19794-2:2005 Table 14 second-to-last line which should reference subclause "8.3.4" not "8.33".

										minutiae, see ISO/IEC 19794-2 (subclause 8.3.3, Table 10)	
								'82'	1	Minutiae order, see ISO/IEC 19794-2 (subclause 8.3.4 and Table 11 and 12)	Native, see sec. 10.5
								'83'	1	Feature handling indicator, see ISO/IEC 19794-2 (Table 15)	00000000b and see sec. 10.6

NOTE NIST does not intend to pass finger position information to the card. Therefore, NIST cannot expect correct data in the '82' tag. NIST requires the tag to be present, per ISO/IEC 19785-3:2007, but will not test its value.

8.6.1. Variants of the ISO/IEC 19794-2 standard

Clause 9 of the ISO/IEC 19794-2:2005 standard gives the "format type" codes for six variants which differ in the encoding (as in Table 26) and placement requirements on minutiae. Placement variation, such as whether a ridge ending is encoded as the ridge skeleton end-point or as the valley bifurcation, remains an open issue in minutiae interoperability. For the current test, NIST will maintain its MINEX requirement of the latter definition. Thus,

- cards must return a value of 0005 for the "format type" in the BIT tag '88', and
- encoders should follow the ISO/IEC 19794-2:2005 clause 6 guidance on placement.

8.7. Verification

8.7.1. APDU specifications

The verification data is sent using the VERIFY command of Table 14.

Table 14 – Command APDU for comparison of biometric templates

Command Parameter	Meaning
CLA INS P1-P2	'00' '21' = VERIFY '00 00'
L_c field	Length of command data field
Data field	'7F 2E' ISO/IEC 19794-2 minutia template 'xx' Length of template Value Field of the template, identical to Table 6.
L_e field	absent

The odd INS value allows the use of P1-P2 parameters with a value of 00-00 as the indication of what is to be verified is given by the tag of the data object presented in the data field of the command.

Table 15 – Response APDU from comparison of biometric templates

Response Parameter	Meaning
Data field	Empty
SW1-SW2	'90 00' (yes) or '63 CX' (register 0) or '63 00' or '63 LL' (info available)

NOTE that this only returns the status code. The required similarity score is returned in a separate GET DATA command, see section 8.7.2.

8.7.2. Locking of the card

NIST seeks to conduct arbitrary comparisons on the card. However NIST will respect '63 CX' counter values and will also attempt to execute high-scoring comparisons with sufficient frequency to ensure that low

scoring verification comparisons are infrequent enough to prevent card locking. NIST will discontinue testing of cards for which these mechanisms are insufficient to prevent locking.

PC-based implementations of MOC algorithms shall never lock.

8.7.3. Similarity scores

NIST must be able to read a similarity score from the card. NIST will not evaluate cards that produce only a verification decision. These requirements support computation of a full DET characteristic, the primary output of this test. NIST considers matching algorithms that produce only a small number of possible similarity values (naturally or otherwise) to be operationally less useful.

Table 17 specifies return of a two-byte similarity score. Native matching scores outside the range [0,65535] should be internally remapped by the implementation.

Table 16 – Command APDU for retrieval of verification similarity score

Command Parameter	Meaning
CLA INS P1-P2	'00' 'CB' = GET DATA '3F FF' = Retrieve from anywhere in the current Dedicated File (Application DF)
L_c field	'03'
Data field	'5C' '01' 'C0' Data Object identifier to be retrieved (two byte similarity score)
L_e field	'04' (2+2) length of BER-TLV encoded data object to be retrieved

Table 17 – Response APDU for retrieval of verification similarity score

Response Parameter	NIST required values	Meaning
Data field	'C0' Tag of the score data '02' Length of the score value xx xx Score value	Big-endian score from the last comparison on [0-65535]
SW1-SW2	See ISO/IEC 7816-4	

NOTE Using a proprietary tag ('C0') to retrieve the verification similarity score is a guarantee this information will not be available for card applications in operational mode because the information uses a tag which has a meaning for the test application only.

8.7.4. Prohibition of stateful behavior

Although NIST is interested in template update as a potential means of improving operational performance, it is beyond the scope of this test. Any card that attempts update is likely to give answers different from those on produced in the Stage 2 PC testing, where template update is prohibited by 9.6.4.

8.8. Reading card identifier

Table 10 of ISO/IEC 7816-6:2004 provides a structure for card data under constructed data element tag '66'. This structure must be readable using the GET DATA APDU of Table 18.

Table 18 – Command APDU for retrieval of Card identifier

Command Parameter	Meaning
CLA INS P1-P2	'00' 'CB' = GET DATA '3F FF' = Retrieve from anywhere in the current Dedicated File (Application DF)
L_c field	'03' length of command data field
Data field	'5C' '01' '66' Data Object identifier to be retrieved (Card Data)

L_e field	'00'

For administration purposes and to identify the card under test, for example in MINEX II test reports, NIST will use the information contained in the response field of Table 19 which should contain a discretionary field, tag '73', containing the card version information in tag '88'.

Table 19 – Response APDU for retrieval of Card identifier

Response Parameter	Meaning	NIST required values
Data field		
SW1-SW2	See ISO/IEC 7816-4	

8.9. Reading matcher identifier

Table 12 of ISO/IEC 7816-6:2004 provides a structure for application related data under constructed data element tag '6E'. This structure must be readable using the APDU of Table 20 and Table 21. NIST shall include the result of this GET DATA whenever it identifies the algorithm, for example in MINEX II test reports.

Table 20 – Command APDU for retrieval of Matcher identifier

Command Parameter	Meaning
CLA INS P1-P2	'00' 'CB' = GET DATA '3F FF' = Retrieve from anywhere in the current Dedicated File (Application DF)
L_c field	'03' length of command data field
Data field	'5C' '01' '6E' Data Object identifier to be retrieved (Application related data)
L_e field	'00'

The response field should contain a discretionary field, tag '73', containing the matcher identifier in tag '99'.

Table 21 – Response APDU for retrieval of Matcher identifier

Response Parameter	Meaning	NIST required values
Data field		
SW1-SW2	See ISO/IEC 7816-4	

9. PC-based API specification

9.1. Overview

This section describes the MINEX II API. It applies to the PC-based Stage 2 accuracy test outlined in section 6.2. The material differences between the MINEX II API and that specified in Ongoing MINEX are as follows.

- The INCITS 378 template shall conform to section 7.2.
- The template generator is required to return the coordinates of a logical center, about which minutiae pruning will be conducted.
- The matchers must accept ISO-CC instances (not I378 instances).

9.2. INCITS 378:2004 compliant templates

All templates created shall conform to the specification of 7.2. NIST will test conformance of all generated templates using our own open-source code[15].

[15] See http://www.itl.nist.gov/iad/894.03/nigos/incits.html

These shall contain the image quality value (line 17 of Table 4) that was input to the SDK by NIST, i.e. the SDK is not to generate this value. This value may be of use to template generators. The value shall be the re-mapped NIST NFIQ value given in Table 22.

Table 22 – NFIQ Mappings

Encoded NFIQ values to be passed as inputs to the template generator			
NFIQ	MINEX 04	800-76-1	MINEX II
1	100	100	100
2	75	80	80
3	50	60	60
4	25	40	40
5	1	20	20

"C" macros for finger quality are given in Annex E.

9.3. Submission

Those wishing to participate in MINEX II testing shall provide NIST with those components identified in the Participation Classes given in section 6.8. Software shall be submitted as an SDK (Software Development Kit) library which complies with the API (Application Programmer Interface) specified in this document. Cards submitted to NIST shall be conformant to ISO/IEC 7816 and support the biometric functionality described in section 8.

9.4. Testing interface

9.4.1. Requirement

MINEX participants shall submit an SDK which presents the "C" prototyped interface given in the following subsections. In MINEX II, Phase 1, the template generation function is optional.

9.4.2. Minutiae extraction

NIST will create templates using the SDK function call defined in Table 23. The function shall be capable of processing the image data specified in Annex C.

Table 23 – MINEX create_template API Function

Prototype	INT32 create_template(const BYTE *raw_image, const BYTE finger_quality, const BYTE finger_position, const BYTE impression_type, const UINT16 height, const UINT16 width, UINT16 *xcenter, UINT16 *ycenter, BYTE *INCITS_378_template);	
Description	This function takes a raw input image and outputs the corresponding I378 conformant template. The memory for the template is allocated before the call i.e. create_template() does not allocate memory for the result. The function returns either success (0) or failure (non-zero). Failure indicates a failure to enroll the image and will nevertheless result in the output of a I378 template with zero minutia. This will be used in subsequent comparisons. An error shall result in a template containing only the record and finger view headers. This number of minutiae shall be set to 0, and no minutia data shall be present. The resulting template shall have length of 32 bytes (26-byte Record Header + 4-byte Finger View header + 2 bytes for the Extended Data Block length which shall be set 0x0000). All other fields in the Record and Finger View headers shall be set to their regular and accurate values.	
Input Parameters	raw_image	The uncompressed raw image used for template creation.
	finger_quality	The quality of the fingerprint image (e.g. QUAL_GOOD).

	finger_position	The finger position code (e.g. FINGPOS_RI).
	impression_type	The impression type code (e.g. IMPTYPE_LP).
	height	The number of pixels indicating the height of the image.
	width	The number of pixels indicating the width of the image.
Output Parameters	xcenter	Horizontal and vertical locations of a center point suitable for pruning to be used per section 10.4.3. If this functionality is not supported, the xcenter shall be set to the input width (i.e. outside the bounds of the image).
	ycenter	
	INCITS_378_template	The output template, per Table 4
Return Value	This function returns zero on success or a documented non-zero error code otherwise.	

9.4.3. Minutiae matching

One-to-one comparisons representative of single-finger verification attempts will be made using the function defined in Table 24.

Table 24 – MINEX API match_templates function

Prototype	INT32 match_templates(const BYTE *verification_template, const BYTE *enrollment_template, float *score);	
Description	This function compares two Table 5 ISO-CC compliant templates and outputs a match score. The verification_template shall be compared to the enrollment_template (in that order where the underlying matcher is order dependent). The returned score is a real number representing the similarity of the parent fingerprint images. It should not be quantized. NIST will allocate memory for this parameter before the call. When the function is called with either or both templates containing zero minutiae (see 7.6) the function shall assign the value -1 to the score, then return a documented error code (see 9.6.3 below). The participant shall inform the MINEX Test Liaison if the legitimate range of matching scores naturally includes the value -1.	
Input Parameters	ISO_CC_verification_template	A Table 5 template from create_template() as processed by NIST according to the verification BIT.
	ISO_CC_enrollment_template	A Table 5 template from create_template() as processed by NIST according to the enrollment BIT.
Output Parameters	score	A similarity score resulting from comparison of the templates.
Return Value	This function returns zero on success (i.e. a valid score is produced) or a documented non-zero error code on failure.	

9.4.4. Implementation identifiers

The implementation shall support the function of Table 25 to identify itself.

Table 25 – MINEX API get_pids function

Prototype	INT32 get_pids(UINT32 *template_generator, UINT32 *template_matcher);
Description	This function retrieves CBEFF PIDs which identify the SDK's supported core template generator and template matcher. Both PIDs shall be four-byte fields conforming to the CBEFF Product Identifier (PID) requirements of clause 6.4.4 of INCITS 378:2004. These state that — The two most significant bytes of the field indicate the (corporate) owner. It is a hexadecimal integer assigned by the IBIA (per the requirement of clause 6.5.12.1 of ISO/IEC 19785-1:2006). — The least two significant bytes are an owner-assigned version number. The memory for the template generator and matcher parameters will be allocated by NIST before the call. If the SDK does not include a template_generator, the returned value shall be zero.

Output Parameters	template_generator template_matcher	A PID which identifies the SDK's minutiae extractor A PID which identifies the SDK's matcher.
Return Value	This function returns zero on success or a documented non-zero error code on failure. In the latter case, both output parameters shall be set to 0.	

9.5. Software and Documentation

9.5.1. SDK Library and Platform Requirements

Participants shall provide NIST with binary code only (i.e. no source code) – supporting files such as header (".h") files notwithstanding. Such files shall not contain intellectual property of the company nor any material that is otherwise proprietary. It is preferred that the SDK be submitted in the form of a single static library file (ie. ".LIB" for Windows or ".a" for Linux). However, dynamic/shared library files are permitted.

If dynamic/shared library files are submitted, it is preferred that the API interface specified by this document be implemented in a single "core" library file with the base filename 'libminex' (for example, 'libminex.dll' for Windows or 'libminex.so' for Linux). Additional dynamic/shared library files may be submitted that support this "core" library file (i.e. the "core" library file may have dependencies implemented in these other libraries).

9.5.2. Linking

NIST will link the provided library file(s) to a C language test driver application (developed by NIST) using

- For windows, version 3.3.3 of the GCC compiler will be used under Cygwin;
- For RedHat Linux 7.3 platforms, version 2.96 of GCC will be used.

All GCC compilers use libc. The link command might be "gcc –o mintest mintest.c -L. –lminex"

Participants are required to provide their library in a format that is linkable using GCC with the NIST test driver, which is compiled with GCC. All compilation and testing will be performed on x86 platforms running either Windows 2000 or Red Hat Linux 7.3 (dependent upon the operating system requirements of the SDK). Thus, participants are strongly advised to verify library-level compatibility with GCC (on an equivalent platform) prior to submitting their software to NIST to avoid linkage problems later on (e.g. symbol name and calling convention mismatches, incorrect binary file formats, etc.).

NOTE Dependencies on external dynamic/shared libraries such as compiler-specific development environment libraries are discouraged. If absolutely necessary, external libraries must be provided to NIST upon prior approval by the Test Liaison.

9.5.3. Installation and Usage

The SDK must install easily (i.e. one installation step with no participant interaction required) to be tested, and shall be executable on any number of machines without requiring additional machine-specific license control procedures or activation.

The SDK's usage shall be unlimited. No usage controls or limits based on licenses, execution date/time, number of executions, etc. shall be enforced by the SDK.

It is recommended that the SDK be installable using simple file copy methods, and not require the use of a separate installation program. Contact the Test Liaison for prior approval if an installation program is absolutely necessary.

9.5.4. Documentation

Participants shall provide complete documentation of the SDK and detail any additional functionality or behavior beyond that specified here. The documentation must define all error and warning codes (see 9.6.3).

9.5.5. Modes of operation

Individual SDKs provided shall not include multiple “modes” of operation, or algorithm variations. No switches or options will be tolerated within one library. For example, the use of two different “coders” by a minutiae extractor must be split across two separate SDK libraries, and two separate submissions.

9.6. Runtime behavior

9.6.1. Speed

The following limits are instituted to constrain NIST's total MINEX II computational workload.

- The mean template match operation shall not exceed 10 milliseconds.
- The mean template creation operation shall not exceed 1.2 seconds (using a 2GHz Pentium IV).

9.6.2. Interactive behavior

The SDK will be tested in non-interactive “batch” mode (i.e. without terminal support). Thus, the submitted library shall not use any interactive functions such as graphical user interface (GUI) calls, or any other calls which require terminal interaction e.g. reads from “standard input”.

9.6.3. Error codes and status messages

The SDK will be tested in non-interactive “batch” mode (i.e. without terminal support). Thus, the submitted library shall run quietly, i.e. it should not write messages to "standard error" and shall not write to “standard output”. Instead, the SDK shall conform to the error notification procedures of Annex D.

9.6.4. External communication

Processes running on NIST hosts shall not write any data to external resource (e.g. server, file, connection, or other process) other than those explicitly allowed in this document.

9.6.5. Stateful behavior

All components in this test shall be stateless and idempotent. No component of the test is permitted to maintain state information. This applies to template generation and matching, and to on-card and off-card activity. NIST will institute appropriate tests to detect stateful behavior in the activities mentioned in the following subsections. If detected, NIST will cease evaluation and inform the provider.

NOTE NIST is prohibiting template adaptation, and will accordingly implement checks to detect any stateful behavior and side-effects. However NIST is interested in template update as a potential means of improving operational performance, but it is beyond the scope of this and foreseeable testing efforts.

10. NIST conversion of I378 to ISO-CC templates

10.1. Background

NIST intends to maintain its use of the I378 standard as a primary format for off-card storage of minutia templates. NIST recognizes the advantages of ISO-CC for on-card storage or matching. Although the two kinds of templates differ, the accuracy implications seem to be limited - see the Annex A simulation of the impact on matching accuracy.

10.2. Presence of BITs on card

Each submitted card shall be populated with two BITs, the first applicable to reference templates, the second to verification templates. These shall be supplied in the structure given in Table 13 which leverage the BIT and BIT grouping structures of ISO/IEC 7816-11:2004 (Tables 1 and 2).

The BITs parameterize the production of templates that a reader, or other system, should send to the requesting card: For a reference template TR, a verification template TV, and a PC or card-based matcher, M, the test will compare BIT-processed versions of the templates to produce a similarity score

$$s = M(BR(TR), BV(TV))$$

where BR and BV denote the function representing the BIT parameterization.

Operationally the BIT parameters (e.g. maximum number of minutiae) might be sent *as inputs* to a template generator. NIST does not intend to do this because such specialization would be computationally prohibitive in the context of an interoperability test[16]. Instead, NIST proposes to standardize the minutiae template reduction process as follows.

10.3. Use of BITs

NIST will treat on-card and off-card matcher implementations identically. This means that the BITs read from the card will be used to parameterize BOTH the conversion of templates sent to the card and to the PC-based match operation.

The conversion operation proceeds with a pruning operation (sec. 10.4.3), a sorting operation (sec. 10.5), and a re-encoding (sec. Annex A.1). NIST will conduct this operation using its own software which

- exists within a larger standard biometric data interchange software distribution named BioMDI,
- is entirely open source[17] ISO/IEC 9899:1999 "C" code,
- is available for download and cooperative development[18] in the open-source model, and
- is under formal version control[19].

Figure 1 – Conversion of INCITS 378 to ISO-CC

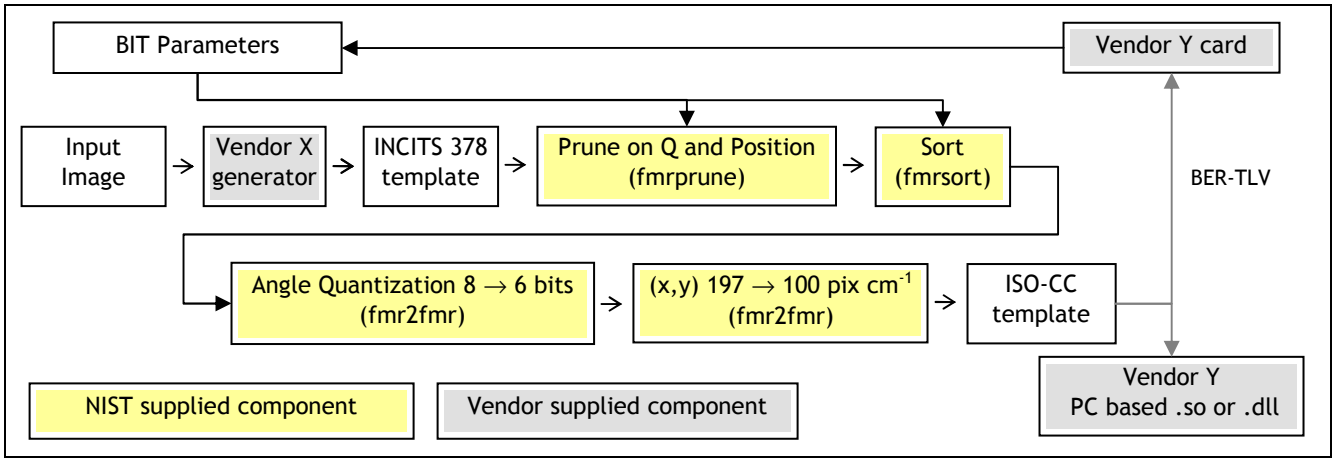

The items in parentheses are the names of executables present in NIST's BioMDI distribution.

[16] For example, if a test used T templates, N template generators and C cards, imposes the requirement to execute O(TNC) image-to-template generations.
[17] See the license at http://www.itl.nist.gov/iad/894.03/nigos/NIGOS_licdis_061906.pdf
[18] The software is available at http://www.itl.nist.gov/iad/894.03/nigos and maintained using a Perforce version control system, at http://www.perforce.com/, for which clients are freely available. While a nightly zip/tar-archive is produced, users should subscribe to NIST's open-source server because it automatically sends email notifications of any changes to the software.
[19] Users need to register http://www.itl.nist.gov/iad/894.03/nigos/NIGOS_User_Registration.pdf and may then access the code branches using a client such as P4V at http://www.perforce.com/perforce/products/p4v.html.

10.4. Number of minutiae

10.4.1. Limits on number

NIST's considers that its role is not to impose algorithmic constraints. However the minimum and maximum numbers of minutia a card may accept are regulated as follows

- The one-byte value implies a range of [0,255],
- Because some templates will naturally contain 0 minutia (see FTA section 7.6), minimum values will be ignored,
- NIST imposed a 128 minutia maximum in all prior MINEX trials. This is arguably too high given that MINEX 04, which used four large operational single index finger flat-impression datasets, found that the leading systems produced a median of 41 minutiae from each image with the 5% and 95% quantiles being 24 and 61 respectively.
- A T=0 APDU command constrains the maximum number of three-byte minutia to 60. Note that T = 0 is not required by NIST.
- Informative Annex D.1.1 of ISO/IEC 19794-2 recommends the minimum number of minutiae for enrollment to be 16, and for verification, 12. It also recommends the maximum number of minutiae for enrollment and verification is 60. NIST notes that these are recommendations only, but otherwise takes no immediate position on the appropriateness of these numbers beyond the information presented in Annex A.

10.4.2. Effect of the BIT

NIST will send single-view templates to the PC-based and card-based matching implementations. The reference and verification templates shall be parameterized by their respective BITs, as follows. If,

- the value indicated in the BIT for the minimum number of minutiae is $0 \le N \le 255$,
- the value indicated in the BIT for the maximum number of minutiae is $0 \le M \le 255$,
- the number of minutia present in a (generally third-party) verification template is K, then
- the number of minutia NIST will send to the card is denoted by S where

$$S = \begin{cases} M & \text{if} \quad K \ge M \\ K & \text{if} \quad K < M \\ K & \text{if} \quad K < N \end{cases}$$

Note that the BIT parameter N is ignored. This is necessary because some input templates will inevitably have zero minutiae. The matcher shall execute successfully when either or both of the input templates contains fewer than N minutiae[20].

NIST will reject cards for which N > M.

10.4.3. Pruning mechanism

When a MOC implementation indicates the capability to take no more than M minutiae, NIST proposes to follow a refined version of the guidance given in the last paragraph of clause 8.3.1 of ISO/IEC 19794-2:2005:

> If the number of minutiae exceeds the maximum number processible by a card, truncation is necessary. The truncation is a 2 step process. At first, finger minutiae of poor quality are eliminated. If still too many minutiae are there, then truncation shall be made by peeling off minutiae from the convex hull of the minutiae set and before sorting into the order required by the card.

[20] An unappealing alternative would be to fill with N-K randomly generated minutiae.

Specifically NIST intends to replace the requirement to use the convex hull, with a method based on the distance of a minutia from a center. This is based on the ISO/IEC 19794-2 subclause 8.3.4 guidance for polar ordering.

Thus given a I378 template containing K minutiae and a BIT request for no more than M minutiae our software will remove K - M minutiae as follows.

Minutiae with the lowest quality value are removed first. If two or more minutia have an equal quality value, then the one with the largest value of the integer quantity

$$r^2 = (x - x_c)^2 + (y - y_c)^2$$

is removed. Finally if those values are tied, then the ISO/IEC 19794-2:2005 polar ordering instruction to prioritize small angle minutiae is applied.

NIST understands that the ISO/IEC 19794-2:2005 material on polar coordinates is intended for sorting, not pruning, but considers the convex hull approach to be complex, and potentially harmful effects.

10.4.4. Pruning center

In MINEX II, all I378 template generators may additionally report the coordinates of an appropriate center about which pruning should be conducted. Earlier versions of this test specification established the minutia means (center-of-mass) for (x_c, y_c), per the ISO/IEC 19794-2:2005 sorting guidance. However, this may be particularly inappropriate when large numbers of minutia are reported in a noisy part of the image.

NIST will conduct pruning about

- the center coordinates from the template generator, if supplied, otherwise
- the center of mass, per the ISO standard.

10.4.5. Pruning priority

It is clear that a quality algorithm producing many levels of quality will cause the pruning operation to prune on r^2 only occasionally. Conversely, a quality algorithm producing few levels of quality will cause r^2 pruning to be more dominant. An implementer should not supply quality values that are dependent solely of r^2 because this contradicts the true-minutia requirement of section 7.2.2.

10.5. Sort order of minutiae

10.5.1. Support for ordering

Although template generators are likely to produce templates whose minutiae have an arbitrary order, the ISO-CC standard defines several geometric orderings of the minutia. The x-y and y-x sorting methods support extension of the spatial range of a fingerprint (e.g. for rolled prints) in one dimension. The polar method supports a center-first sort.

Currently NIST intends to support at least the unsorted, Cartesian y-x, Cartesian x-y and polar sorting methods, because the standard defines these as options. NIST will publish open-source "C" code in due course. NIST does not intend to accept commercial code for this purpose, although we may institute a conformance test for implementations that do.

However, NIST is aware that commercial readers will need to include such software in addition to the pruning software. This adds complexity and a "degree of freedom" that would better be handled as a natural property of the matching algorithm. Although NIST notes the European Citizen Card specification, CEN/TS 15480-2, requires implementations to accept arbitrarily sorted data, NIST prefers not to ignore the SC37/WG3 intent to allow sorting. NIST does consider that the exact requirements of ISO/IEC 19794-2 clause 8 are unclear.

10.5.2. Modulo sorting for large images

Note that archival imagery used in all planned MINEX evaluations is at most 500 pixels in width and height, and is scanned at 19.7 pixels mm^{-1}, and therefore all possible minutiae coordinates can be encoded in 8 bits without modulo sorting (or removal).

The ISO/IEC 19794-2:2005 standard needs modification, see Annex F.1.

10.6. Ridge count, core and delta and zonal quality information

The ISO/IEC 19794-2 standard allows the BIT to request the "extended data" defined in clause 7.5 of that standard. However in Table 13, the binary value 00000000b indicates that ridge count, core and delta information is out of the scope of this test. Suppliers must adhere to the zero specification here.

This implies, in addition, that fully proprietary data is prohibited also.

NIST is interested in possible performance improvement associated with the use of richer templates, but past experience with INCITS 378 extensions (MINEX 04) has not suggested large improvements are available. However NIST will, on request from any interested party, consider conducting tests of templates that include extended data. Particularly, what benefits would zonal quality allow beyond that associated with a (calibrated) minutia quality value.

11. References

[1] C. Wilson et al., “Biometric Data Specification for Personal Identity Verification,” NIST Special Publication 800-76-1 http://csrc.nist.gov/publications/nistpubs/800-76-1/SP800-76-1_012407.pdf

[2] P. Grother et al., “Performance and Interoperability of the INCITS 378 Template,” NIST IR 7296 http://fingerprint.nist.gov/minex04/minex_report.pdf

[3] E. Tabassi et al. “Finger Print Image Quality,” NISTIR 7151 2004 (Gaithersburg, MD: National Institute of Standards and Technology, August 2004) http://www.itl.nist.gov/iad/894.03/quality/reports/ir_7151.pdf

[4] American National Standard for Information Technology – Finger Minutiae Format for Data Interchange, ANSI/INCITS 378-2004, www.incits.org

Annex A
Comparison of the INCITS 378 and ISO/IEC 19794-2 standards

CBEFF Format Owner = 0101 for ISO/IEC JTC 1/SC 37.

CBEFF Format Type = 0005 for ridge endings encoded as valley bifurcation points, as in INCITS 378.

The INCITS 378 standard's record format and the ISO/IEC 19794-2 compact card format differ syntactically and semantically. These differences are presented in the next two subsections. Thereafter we address the implications for transcoding between the standards, and the MINEX requirements.

A.1 Syntactic differences

The INCITS 378:2004 and ISO-CC templates differ as follows. In ISO-CC

- the (x,y) coordinates are encoded in 8 bits as opposed to 14 bits,
- the spatial resolution is fixed at 10 pixels per millimeter as opposed to variable resolution,
- the angle is encoded in 6 bits as opposed to 8 bits, and
- the minutia quality value is absent.

These differences are depicted in Table 26. Note that ridge count and core and delta information is not being evaluated in this test, and therefore the BIT entry defined in ISO/IEC 19794-2 Table 14, shall be set to 0, and ignored.

Table 26 – Minutia encodings of the ISO-CC and INCITS 378

	Byte 1	Byte 2	Byte 3		Byte 4	Byte 5	Byte 6
ISO/IEC 19794-2 Compact Card Format	x coord.	y coord.	t	angle			
	8	8	2	6			
ISO/IEC 19794-2 Record Format and INCITS 378	t	x coord.	r	y coord		angle	quality
	2	14	2	14		8	8
	t = type		r = reserved				

A.2 Semantic differences

The abbreviated 8 bit (x,y) encodings in the ISO-CC standard support "typical" single-finger images by specifying a hard-wired resolution of 10 pixels per millimeter (ISO/IEC 19794-2, subclause 8.2). This is approximately half of typical enrollment data gathered on 500 ppi (19.7 pixels per millimeter) optical scanners. This is summarized in Table 27. The effect would be that minutia can not extend over a region larger than 255 / 10 = 25.5 mm. However the ISO-CC standard provides for coordinate wraparound wherein the minutia coordinates are sorted such that the actual value may extend beyond the range by encoding it as x mod 256. Reconstruction of the actual value is possible because sorting is applied.

Table 27 – Minutia location quantization of ISO-CC and INCITS 378 templates

Standard	Allowed values (units)	Allowed values (mm)	Allowed values (mm), at 500 ppi
INCITS 378:2004 record format	[0,16383]	Depends on the encoding resolution	[0, 0.051, 0.1015, 0.1523, …, 831.6]
ISO/IEC 19794-2 record format			
ISO/IEC 19794-2 compact card	[0,255]	[0, 0.1, 0.2 … 25.5]	N/A

As shown in Table 28, the three different angular encodings support minutia encodings of varying precision. Whether this difference materially affects performance is dependent on the sensitivity of the matching algorithm, and on how accurately template generators measure the angle.

Table 28 – Minutia angle quantization of ISO-CC and INCITS 378 templates

Standard	Allowed values (units)	Quantization	
		Degrees per unit	Radians per unit
INCITS 378:2004 record	[0,179]	360 / 180 = 2	2pi / 180 = 0.0349
ISO/IEC 19794-2 record	[0,255]	360 / 256 = 1.4063	2pi / 256 = 0.0245
ISO/IEC 19794-2 compact card	[0,63]	360 / 64 = 5.625	2pi / 64 = 0.0982

A.3 Simulation protocol

To quantify the effects of the ISO-CC encoding vs. the INCITS 378 record format, NIST simulated the production of ISO-CC templates by quantizing the coordinates and angles in sets of INCITS 378 templates produced in NIST's existing MINEX testing.

Figure 2 - Use of INCITS 378 for simulation of ISO-CC accuracy

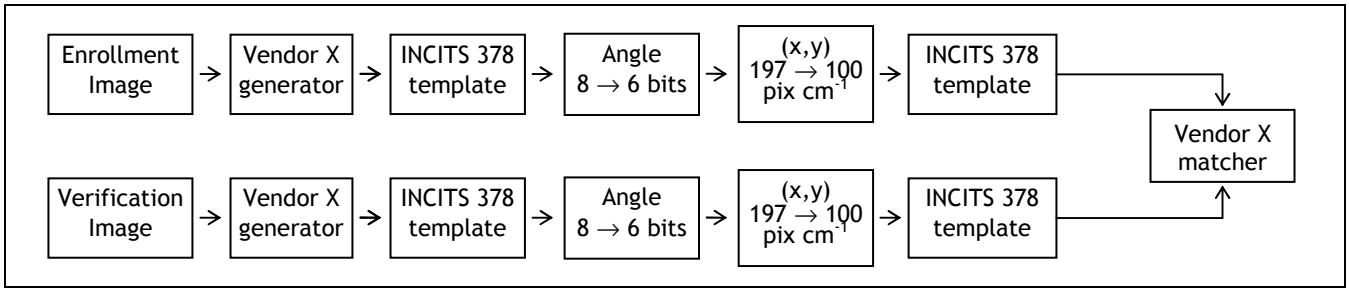

The C code fragments to effect these transformations are shown in Table 29. This code is part of the "fmrisocompact" program distributed[21] by NIST as part of a suite of libraries and applications that support various INCITS biometric standards.

Table 29 – Source code for conversion of INCITS 378 to ISO-CC

Angular re-quantization

```
// The ISO minutia record has 6 bits for the angle, so
// we have 64 possible values to represent 360 degrees.
for (m = 0; m < mcount; m++)                                          // for all minutiae
{
   const int theta = 2 * (int)fmds[m]->angle;                         // 378 has 2 degrees
   const double isotheta = round((64.0 / 360.0) * (double)theta);     // CC has 5.625 deg
   fmds[m]->angle = (unsigned char)round(((360.0 / 64.0) * isotheta) / 2.0); // Put back in 378
}
```

Spatial re-quantization

```
for (m = 0; m < mcount; m++)                        // for all minutiae
{
   const double x = (double)fmds[m]->x_coord;       // cast from unsigned short
   const double y = (double)fmds[m]->y_coord;       // cast from unsigned short

   const double xmm = 10.0 * x / (double)xres;      // millimeters, because INCITS 378 resolution
   const double ymm = 10.0 * y / (double)yres;      // values are in pixels per centimeter
   const double xunits = xmm / 0.1;                 // units of 0.1 pix per mm which is the CC
   const double yunits = ymm / 0.1;                 // card format's hardwired sampling freq
   const unsigned short xcc =
               (unsigned short)(0.5 + xunits);      // round the value - this is what would be
   const unsigned short ycc =                       // stored in "typical" say 500 dpi operation
               (unsigned short)(0.5 + yunits);

   fmds[m]->x_coord = (unsigned short)((double)xcc * (double)xres * 0.01);  // Now put back
   fmds[m]->y_coord = (unsigned short)((double)ycc * (double)yres * 0.01);  // in 378 format
}
```

[21] This is available for download; see http://www.itl.nist.gov/iad/894.03/nigos/incits.html

We took five vendors and applied their matchers to INCITS 378 templates derived from the outputs of that vendor's template generator. They are applied natively, that is to enrollment and verification templates from the same supplier's INCITS 378 generator. The five matching algorithms, identified in the first columns, are some of the more accurate ones assessed in the Ongoing MINEX evaluation.

All results apply to single finger matching using the POEBVA collection of left and right index fingers, as used in the Ongoing MINEX evaluation. The FNMR computation is conducted over 15 disjoint sets each containing 16000 genuine scores. The FMR computation is likewise conducted over 15 disjoint sets each containing 16000 impostor scores.

A.4 Results after re-quantization of angle and position

Table 30 gives the change in FNMR when the matcher operating threshold is set to achieve FMR values of 0.01 on INCITS 378 templates and then reset to achieve those FMRs on ISO-CC templates. This thresholding strategy is representative of the situation where thresholds can be set for the ISO-CC template independently of any INCITS 378 matcher trial or calibration.

Table 30 – Relative accuracy of ISO-CC and INCITS 378 templates (Fixed FMR)

	Base FMR	Base FNMR	Change in FNMR	
A1	0.01	0.0140	0.0005 +/- 0.0006	p 2e-03
A2	0.01	0.0158	0.0018 +/- 0.0007	p 3e-08
A3	0.01	0.0133	0.0007 +/- 0.0007	p 2e-03
A4	0.01	0.0183	0.0006 +/- 0.0005	p 6e-05
A5	0.01	0.0159	0.0008 +/- 0.0005	p 9e-05

Table 31 gives changes in FMR and FNMR when the matcher operating threshold is set to achieve FMR values of 0.01, on the unaltered INCITS 378 templates. This thresholding strategy is representative of the situation where a ISO-CC template is sent, with transcoding, to an INCITS 378 matcher.

Table 31 – Relative accuracy of ISO-CC and INCITS 378 templates (fixed t)

Change in FMR and FNMR when ISO-CC encoding is synthesized from instances of the INCITS 378 record format "MIN:A" templates.						
	Base FMR	Change in FMR		Base FNMR	Change in FNMR	
A1	0.01	-0.0013 +/- 0.0008	p 7e-06	0.0140	0.0008 +/- 0.0008	p 5e-04
A2	0.01	-0.0008 +/- 0.0011	p 1e-02	0.0158	0.0020 +/- 0.0007	p 4e-09
A3	0.01	-0.0006 +/- 0.0008	p 6e-03	0.0133	0.0007 +/- 0.0006	p 5e-04
A4	0.01	-0.0004 +/- 0.0006	p 1e-02	0.0183	0.0007 +/- 0.0007	p 7e-04
A5	0.01	-0.0008 +/- 0.0009	p 1e-03	0.0159	0.0010 +/- 0.0008	p 1e-04

Thus when going from INCITS 378 to ISO-CC

- Table 30 shows small but statistically significant increases in FNMR. The worst case is A2 whose FNMR goes from 0.0158 to 0.0176 at a FMR of 0.01 corresponding to about 11% more missed matches.
- At a fixed threshold for both kinds of template, Table 31 shows small that FMR is slightly but significantly lower for ISO-CC than for INCITS 378, but that FNMR is again higher.

The presence of an algorithm-effect (some implementations are more sensitive than others, viz. A2 over A3, means that vendors should consider this issue for their implementations.

NOTE The change in performance for less accurate matchers and template generators has not been studied.

A.5 Results after reduction in number of minutiae

The plots of Figure 3 show the effect of apply the pruning operation of section 10.4.3 to raw INCITS 378 (not ISO-CC) templates. The effect on accuracy is shown for the same five leading matcher providers as used above. The matchers are applied natively i.e. the matcher from provider X is applied to compare templates from X's generator. For each matcher, the threshold is set to the value that gives a FMR of 0.001 on the entire unpruned corpus. The error rates are then recomputed after removing zero or more minutia to

achieve a maximum of N in each template. The top graph shows the effect of retaining all minutiae in the enrollment template and minutiae in the verification template. The lower graph shows the effect of pruning both.

The conclusions are

- FNMR increases for all matchers algorithms, with approximately 60 minutia being a reasonably "lossless" value. Note that the 95% percentiles for number of minutiae are 60, 65, 60, 64, and 63.
- FNMR has increased by an order of magnitude (from ~2% to ~20%) when fewer than 20 minutia are used.
- FMR values also change significantly, beginning at the same 60 minutiae breakpoint, and substantially below about 20 minutiae. Some systems improve (decline in FMR) and some degrade (increase in FMR). NIST is concerned that any increase in FMR associated with transactions involving small numbers of minutiae is a security hazard.

Not shown here is distributional information on the numbers of minutiae produced by template generators. NIST has observed variation in the numbers found from a single image. Also not shown are interoperable results (cross-vendor) and NIST suggests that an incorrect conclusion from the graphs would be that template generators finding more minutiae are better performing.

A.6 Conclusions

The ISO-CC template can offer performance approaching that of the INCITS 378 template. However, some implementations exhibit degraded performance. This study, however, only approximates actual ISO-CC performance because providers may be able to improve algorithmic functionality if they specifically know the target result is ISO-CC.

Figure 3 – Effect of minutia pruning on FNMR (above) and FMR (below)

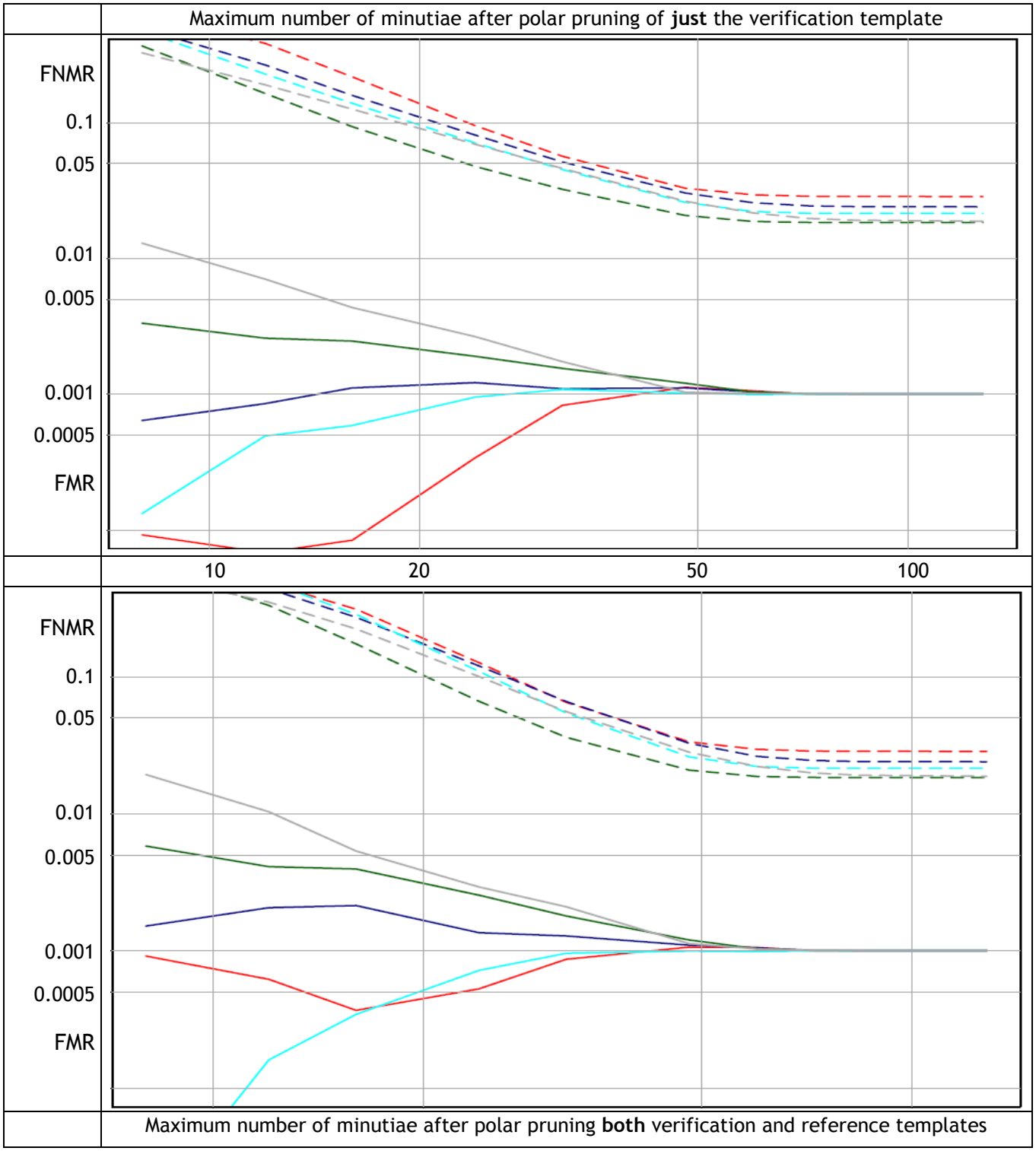

Annex B
Three-way interoperability

NIST anticipates that some cards embed fingerprint matchers that are not accompanied by an associated template generator, and may well be used with enrollment and verification templates coming from two different sources. That is card-based matcher, M, will compare a reference template produced by X with a verification template from Y. NIST will evaluate three-way interoperability in this test. MINEX participants should be aware that the MINEX 04 measurements of Figure 4, show three-way interoperability (green) will generally offer poorer performance

- than in two-way (cyan) or native (horizontal bar) cases, and
- in situations (matchers 1 and 4) in which the provider of a matcher supplies a template generator that is less effective than its peers.

Figure 4 – Native vs. Two-way vs. Three-way Interoperability

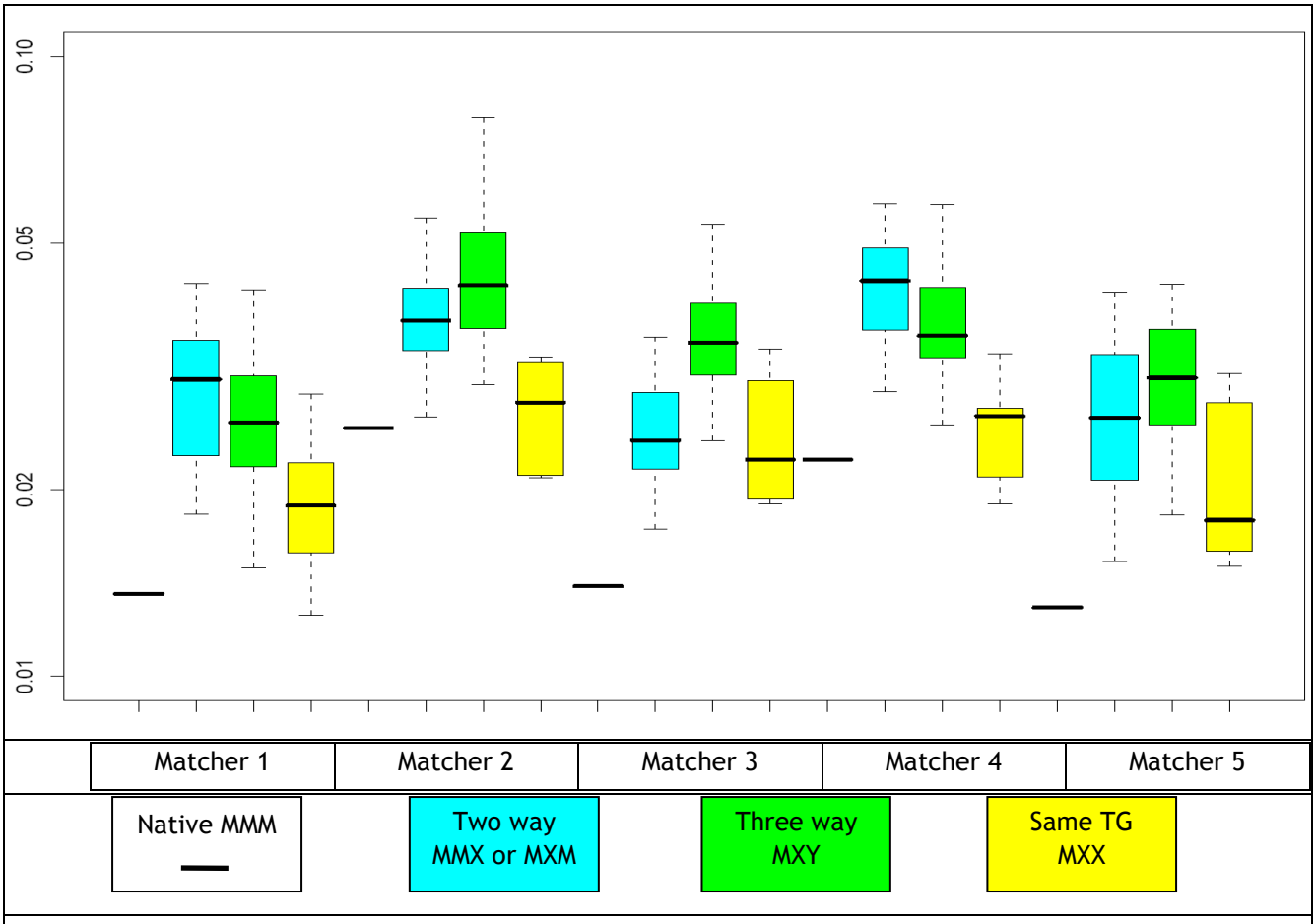

The notation here, MXY, denotes use of matcher supplier M, with template generator suppliers X and Y. The values plotted are FNMR values at FMR = 0.01 for five leading matcher providers executing left and right single-finger matches of INCITS 378 templates. The matchers are paired with the best seven different template generators found in MINEX 04.

NIST acknowledges that not requiring a card/matcher provider to team with a template generator provider is inconsistent with the requirement in section 6.6 to require pairing of card and matcher combinations. However this seeming inconsistency is undertaken in light of the following:

- Cards and matching algorithms may well be bound at time of manufacture;

- Cards and reference templates are bound at time the card issuance or IDMS software was shipped by an integrator;
- Although software matcher implementations (e.g. Java applets) exist (and are eligible for testing) and these could be selected during integration or even issuance, they are reported to run significantly more slowly.

Further NIST is motivated by a desire to improve performance, both in this evaluation and in fielded operation. Given that NIST has demonstrated that some template generators are better than others, NIST seeks to measure card-matcher-template generator compatibility.

Annex C
Input fingerprint image specifications

C.1 Format

The SDK must be capable of processing fingerprint images supplied to the SDK in uncompressed raw 8-bit (one byte per pixel) grayscale format. Each image shall appear to have been captured in an upright position and approximately centered horizontally in the field of view. The image data shall appear to be the result of a scanning of a conventional inked impression of a fingerprint. Figure 1 illustrates the recording order for the scanned image. The origin is the upper left corner of the image. The x-coordinate (horizontal) position shall increase positively from the origin to the right side of the image. The y-coordinate (vertical) position shall increase positively from the origin to the bottom of the image.

Figure 5 – Fingerprint image raster scan order

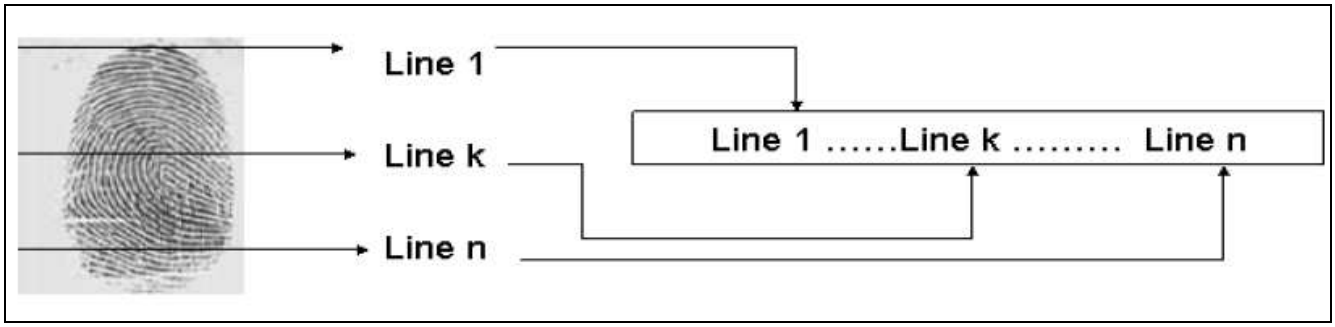

Raw 8-bit grayscale images are canonically encoded. The minimum value that will be assigned to a "black" pixel is zero. The maximum value that will be assigned to a "white" pixel is 255. Intermediate gray levels will have assigned values of 1- 254. The pixels are stored left to right, top to bottom, with one 8-bit byte per pixel. The number of bytes in an image is equal to its height multiplied by its width as measured in pixels; there is no header. The image height and width in pixels will be supplied to the SDK as supplemental information.

C.2 Resolution and dimensions

All images for this test will employ 500 PPI resolution (horizontal and vertical).

The dimensions of the fingerprint images will vary from 150 to 812 pixels in width, and 166 to 1000 pixels in height.

Note – the SDK must be capable of processing images with any dimensions in these specified ranges without the use of separately invoked cropping or padding facilities. For example, SDKs which require cropping of large images must do so internal to the operation of the create_template (see below) API call.

C.3 Sensor and impression types

All images used for testing in MINEX come from the POEBVA data set described in NISTIR 7296 [2] (see Appendix B, Table 23 page 47) and thus have been obtained from live-scan sensors (Smiths-Heimann ACCO 1394 and Cross Match 300A). All images tested in MINEX are plain impression type images.

Annex D
Error Codes and Handling

Each participant shall provide their SDK with text documentation of all (non-zero) error or warning return codes (see section 9.5.4, Documentation).

The application should include error/exception handling so that in the case of a fatal error, the return code is still provided to the calling application.

At minimum the return codes of Table 32 shall be used.

Table 32 – MINEX API return codes

Return code	Explanation
0	Success
1	Image size not supported
2	Failed to extract minutiae – unspecified error
3	Failed to extract minutiae – impression type not supported
4	Failed to match templates – null probe or gallery template
5	Failed to match templates – unable to parse probe template
6	Failed to match templates – unable to parse gallery template

All messages which convey errors, warnings or other information shall be suppressed.

Annex E
Predefined SDK Constants

E.1 Pre-defined values

The pre-defined values (constants) of Table 33 are for use in specifying parameters to the MINEX testing interface:

Table 33 – MINEX API predefined values

// Finger quality values #define QUAL_POOR 20 // NFIQ value 5 #define QUAL_FAIR 40 // NFIQ value 4 #define QUAL_GOOD 60 // NFIQ value 3 #define QUAL_VGOOD 80 // NFIQ value 2 #define QUAL_EXCELLENT 100 // NFIQ value 1	// Finger position codes #define FINGPOS_UK 0x00 // Unknown finger #define FINGPOS_RT 0x01 // Right thumb #define FINGPOS_RI 0x02 // Right index finger #define FINGPOS_RM 0x03 // Right middle finger #define FINGPOS_RR 0x04 // Right ring finger #define FINGPOS_RL 0x05 // Right little finger #define FINGPOS_LT 0x06 // Left thumb #define FINGPOS_LI 0x07 // Left index finger #define FINGPOS_LM 0x08 // Left middle finger #define FINGPOS_LR 0x09 // Left ring finger #define FINGPOS_LL 0x0A // Left little finger
// Impression type codes #define IMPTYPE_LP 0x00 // Live-scan plain #define IMPTYPE_NP 0x02 // Nonlive-scan plain	

Note that the finger position codes differ in the fingerprint standards, and the smart-card standards.

For all interactions with the card ISO/IEC 7816-11:2004 finger position codes shall be used. For all interactions with PC-based implementations ISO/IEC 17994-2:2005 finger positions shall be used. NIST will transcode any values using the Table 34 associations whenever needed. The table summarizes the two base standards and is included here for informative purposes only.

Table 34 - ISO/IEC 19794-2 and ISO/IEC 7816-11 finger position codes

Finger ID Biometric subtype	ISO/IEC 19794-2:2005		ISO/IEC 7816-11:2004	
	Binary value	Hex Value	Binary value	Hex Value
No information given	00000b	00	00000b	00
right thumb	00001b	01	00101b	05
right index	00010b	02	01001b	09
right middle	00011b	03	01101b	0D
right ring	00100b	04	10001b	11
right little	00101b	05	10101b	15
left thumb	00110b	06	00110b	06
left index	00111b	07	01010b	0A
left middle	01000b	08	01110b	0E
left ring	01001b	09	10010b	12
left little	01010b	0A	10110b	16

Annex F
Ambiguities in the standards

F.1 Compact card sorting

The last line of ISO/IEC 19794-2:2005 clause 8.3.4 "The same construction principle may be applied also for the Y coordinate" should be changed to "The same construction principle may alternatively be applied to the Y coordinate. Using this construction on X and Y together is not possible."

Clause 8.3.4 is very long. To enable easy citation of the standard, it needs to be broken up into named (or even umnamed) subparagraphs.

The text in ISO/IEC 19794-2:2005 Table 14 second-to-last line references subclause "8.33" which should be "8.3.4".

F.2 Unique minutia

There should be a normative requirement for minutia (x,y,theta) triples to be unique. The issue of requiring unique (x,y) values seems to be in conflict with the reporting of trifurcations which would have same (x,y).

F.3 No support for placing reference data on the card

ISO/IEC FDIS 19785-3:2007(E) establishes the CBEFF TLV-encoded CEBFF patron format for the tag associated with biometric subtype data (in this case finger position). This value is '82'. Neither ISO/IEC 7816-11:2004, nor ISO/IEC 19794-2:2005 include normative specifications for this location. However, there is no standardized mechanism for finger position information to be sent to the card when storing a reference template. Indeed, none of the relevant standards advance a normative prescription for a ISO/IEC 7816-4:2005 command for this purpose. Yes, ISO/IEC 7816-11:2004 includes the use of a CHANGE REFERENCE DATA command as an example in informative Annex B, but that text does not advance a method for passing the biometric subtype to the card.

NIST sees the lack of a standardized command as an impediment to MINEX II (see discussion in section 8.5).

NIST sees the lack of a standardized mechanism for transmission of biometric subtype data to the card as an inhibitor toward (future) multi-finger applications.

NIST is interested in standardization of the transmission of reference data to the card.

A revision of ISO/IEC 19794-2 might usefully include definitive procedures for enrolling fingerprint minutiae templates on the card. It should recommend CHANGE REFERENCE DATA or PUT DATA and particularly should establish tags for finger position (biometric subtype). NIST notes that there is no support for unsegmented fingerprints.

Annex G
ISO/IEC 19794-2:2005 record profile

Table 35 – MINEX II profile of ISO/IEC 19794-2:2005 standard

	Field name and ISO/IEC 19794-2:2005 clause numbers in parentheses	Values Allowed	Informative Remarks
5.	Format Identifier (7.3.1)	0x464D5200	i.e. ASCII "FMR\0"
6.	Version Number (7.3.2)	0x20323000	i.e. ASCII " 20\0".
7.	Record Length (7.3.3)	32 ≤ L ≤ 800	26 record header + 4 view header +2 extended data length + 6K. Max K is 128
8.	Capture Equipment Certifications (7.3.4)	0	
9.	Capture Device Type ID (7.3.5)	0	
10.	Size of Scanned Image in x direction (7.3.6)	MIT	Inherited directly from input data
11.	Size of Scanned Image in y direction (7.3.7)	MIT	
12.	X (horizontal) resolution (7.3.8)	197	
13.	Y (vertical) resolution (7.3.9)	197	
14.	Number of Finger Views (7.3.10)	1	
15.	Reserved Byte (7.3.11)	0	
16.	Finger Position (7.4.1.1)	MIT	Inherited directly from input data
17.	View Number (7.4.1.2)	0	
18.	Impression Type (7.4.1.3)	0 or 2	Inherited directly from input data
19.	Finger Quality (7.4.1.4)	MIT	Inherited directly from input data
20.	Number of Minutiae (7.4.1.5)	0 ≤ K ≤ 128	K minutiae data blocks
21.	Minutiae Type (7.4.2.1)	01b, 10b, or 00b	
22.	Minutiae Position (7.4.2.2)	MIT	
23.	Minutiae Angle (7.4.2.3)	MIT	
24.	Minutiae Quality (7.4.2.4)	0, 1 ≤ Q ≤ 100	0 = unsupported
25.	Extended Data Block Length (7.5.1.1)	>= 0	Either 0 for no extended data, or the length of a zonal quality block
26.	Extended Data Area Type Code (7.5.1.2)	0x0003	Optional, only present if (7.5.1.1) is > 0.
27.	Zonal Q. Cell Width and Height (7.5.4.1)	1 ≤ NPIX ≤ W	Optional, only present if (7.5.1.1) is > 0.
	Zonal Q. Cell Width and Height (7.5.4.1)	1 ≤ NPIX ≤ H	Optional, only present if (7.5.1.1) is > 0.
28.	Zonal Q. Cell Quality Info. Depth (7.5.4.2)	1, 2, 4, 8	Optional, only present if (7.5.1.1) is > 0. This value shall not be 0.
29.	Zonal Q. Cell Quality Data (7.5.4.3)		Optional, only present if (7.5.1.1) is > 0.
MIT = mandatory at time of instantiation			

Table 36 – ISO/IEC 19794-2 minutiae template DO

Tag	L	Value					
‘7F2E’	L1	Biometric data template					
		Tag	L	Value			
		‘81’	L2	Finger minutiae data			
				Field	Size (bits)	Valid Values	
				X coordinate	8	[0,255]	S instances
				Y coordinate	8	[0,255]	
				Minutiae type	2		
				Minutiae angle	6	[0,63]	
		'94'	L3	Zonal Quality Data	5+var	See Table 37	1 instance

where the zonal quality block shall conform to Table 37. This data is a modified version of that inserted into ISO/IEC 19794-2:2005 by the draft Technical Corrigendum 1, SC 37 N2119.

Table 37 – Zonal quality data

	FIeld	Length (bytes)	Values Allowed	Informative Remarks
1	Horizontal Resolution of the Quality Map (8.4.1.1.2)	1		See Note 1 and Example 1
2	Vertical Resolution of the Quality Map (8.4.1.1.2)	1		
3	Quality Map Width (8.4.1.1.3)	1		# cells in x horizontal direction
4	Quality Map Height (8.4.1.1.3)	1		# cells in y vertical direction
5	Cell Quality Information Depth (8.4.1.1.4)	1	1, 2, 4, 8	Not 0.
6	Cell Quality Data (8.4.1.1.5)	L		Packed bits

NOTE 1 The first draft Technical Corrigendum 1, SC37N2119 has one field for cell quality resolution, i.e. it assumes the x-y resolutions are equal. However, the ISO-REC standard allows different cell resolutions in x and y. Therefore, if the ISO-REC to ISO-CC transcoding process is to become viable operationally, then card zonal quality data needs to support anisotropic resolutions. NIST will comment on the update of N2119 (to be circulated for ballot in the latter half of 2007).

EXAMPLE 1 If the horizontal cell dimension in a ISO-REC zonal quality block (clause 7.5.4.1 of ISO/IEC 19794-2:2005) is 20 pixels, and the corresponding horizontal resolution is 197 pixels per centimeter (clause 7.3.8 of ISO/IEC 19794-2:2005), then the value of the entry on line 1 of this table (i.e. the number of cells per decimeter) will be round(10 * 197 / 20) = 99, where the rounding operator is nowhere standardized.

Annex H
Application to participate in MINEX II

H.1 Who should participate

Providers of ISO/IEC 7816 card-based MOC implementations using ISO/IEC 19794-2:2005 minutia-based templates are invited to participate in MINEX II. In addition, companies, research organizations, or universities that have developed mature prototypes or who research fingerprint matching of interoperable templates are invited to participate.

The fingerprint template generation and matching software need not be "operational," nor a production system, nor commercially available. However, the system must, at a minimum, be a stable implementation capable of being "wrapped" (formatted) in the API specification that NIST has specified in section 9 for this evaluation.

Anonymous participation will not be permitted. This means that signatories to this Agreement acknowledge that they understand that the results (see sections 6.8 and Annex H.7) of the evaluation of the software and/or hardware will be published with attribution to their organization(s).

H.2 How to participate

H.2.1 Application form

In order to request participation in MINEX II, potential participants must

- fill out this Annex H, Agreement Application to Participate in MINEX II,
- identify the Responsible Parties and the Points of Contact,
- print and sign the form, and
- send to the address given in Annex I.

H.2.2 Parties

The Responsible Party is an individual with the authority to commit the organization to the terms in this document.

The Point of Contact is an individual with detailed knowledge of the system applying for participation.

H.3 NIST activity

H.3.1 Initiation

Upon receipt of the signed Annex H form by NIST, the organization or organizations, if teaming, shall be classified as a "Participant". NIST must receive the form during the submission period described in the MINEX II Calendar.

H.3.2 Supplier validation

Registered Participants should download the small Validation Dataset available on the website. Prior to submission of their SDK the Participant needs to verify that their software executes on the validation data, and produces correct similarity scores and templates.

H.3.3 Submission of hardware to NIST

Suppliers shall send five identical instances of the smart card to NIST at the address given in Annex I. Suppliers commit to assisting NIST in resolving deviations from the specifications of this document, errors, defects or inconsistencies.

H.3.4 Submission of software to NIST

After the Participant has executed his software on the validation imagery, the participants shall send the software and its validation output to NIST. All submitted SDKs shall be encrypted using GnuPG (gpg) by downloading the MINEX Test Liaison public key here[22] and

- Importing it into your keyring using: gpg --import minex_pk.asc
- Using it to encrypt your SDK (with ASCII armor if submitting via email): gpg -r minex -ae mysdk.zip

The result shall either be

- emailed to minex@nist.gov or
- sent to NIST on CD media to the address given in Annex I.

H.3.5 Acceptance testing

Cards submitted shall implement the APDU specifications of section 8.

Software submitted shall implement the MINEX II API Specification of section 9.

Upon receipt of the SDK and validation output, NIST will attempt to reproduce the output by executing the SDK on the validation imagery, using a NIST computer. In the event of disagreement in the output, or other difficulties, the Participant will be notified.

In the event cards or software is found to be non-functional or non-compliant with this document's specifications, or where the validation dataset results cannot be replicated by NIST, Participants will be notified with a detailed description of the problem(s) and given a reasonable opportunity to resubmit (as time allows) according to the discretion of the MINEX II Liaison.

H.3.6 Limits of testing

NIST will use the Participant's cards and SDK software only for the testing described in this document. The provided hardware and software will also be used to resolve any errors identified subsequent to the test or publication of results.

NIST agrees not to use the Participants software for purposes other than indicated herein, without express permission by the Participant.

H.4 Points of contact

The MINEX II Liaison is the government point of contact for MINEX II. All correspondence should be directed to minex@nist.gov, which will be received by the MINEX II Liaison and other MINEX II personnel.

These correspondences may be posted on the FAQ (Frequently Asked Questions) area of the MINEX II website at the discretion of the MINEX II Liaison. The identity of those persons or organizations whose correspondences lead to FAQ postings will not be made public in the FAQ.

H.5 Access to MINEX II validation data

The MINEX II Validation Data is supplied to Participants to assist in preparing for MINEX II.

The fingerprints in the MINEX II Validation Data are representative of the MINEX II Test Data only in their format. Image quality, collection device and other characteristics are likely to vary between the Validation and Test Datasets.

[22] The URL is http://fingerprint.nist.gov/minex/minex_pk.asc and the key's fingerprint is: 448F 3828 719D B6B0 FDC5 3DE6 715B 6C72 062A 520A.

H.6 Access to MINEX II test data

The MINEX II Test Datasets are protected under the Privacy Act (5 U.S.C. 552a), and will be treated as Sensitive but Unclassified and/or Law Enforcement Sensitive.

MINEX II Participants shall have no access to MINEX II Test Data, either before, during or after the test. Information about the images data has been previously published in MINEX 04 report, NIST IR 7296[23].

H.7 Reporting of results

H.7.1 Reports

The Government will combine appropriate results into one or more MINEX II Reports. Together these will contain, at a minimum, descriptive information concerning MINEX II, descriptions of each experiment, and aggregate test results. NIST will use DET performance metrics as the primary indicators of one-to-one verification search accuracy. This involves plotting false rejection versus false acceptance rates for all threshold values. NIST will also report enrollment and verification timing information.

NIST may compute and report other aggregate statistics.

H.7.2 Pre-publication review

Participants will have an opportunity to review and comment on the Reports. Participants' comments will be either incorporated into the main body of the report (if it is decided NIST reported in error) or published as an addendum. Comments will be attributed to the participant.

H.7.3 Citation of the report

After the release of the Phase II Final Report, Participants may decide to use the results for their own purposes. Such results shall be accompanied by the following phrase: "Results shown from the Minutiae Interoperability Exchange Test (MINEX II) do not constitute endorsement of any particular system by the U. S. Government." Such results shall also be accompanied by the URL of the MINEX II Report on the MINEX II website.

H.7.4 Rights and ownership of the data

Any data obtained during MINEX (excepting the submitted SDK itself), as well as any documentation required by the Government from the participants, becomes the property of the Government. Participants will not possess a proprietary interest in the data and/or submitted documentation.

H.8 Return of the supplied materials

H.8.1 Returning software to vendors

NIST will not return any supplied software, documentation, or other material to vendors.

H.8.2 Returning cards to vendors

NIST will not return cards to the provider. NIST will destroy the cards within ninety days of publication of the results for that card or notification to the vendor that the card is inoperable. This requirement is needed because template data on the card is protected and because NIST has no mechanism to assure deletion of templates from the card. However, NIST to support debugging NIST may, at its sole discretion, return cards during the initial acceptance testing phase.

H.9 Agreement to participate

With the signing of this form, Participants attest that they will not file any MINEX II-related claim against MINEX II Sponsors, Supporters, staff, contractors, or agency of the U.S. Government, or otherwise seek compensation for any equipment, materials, supplies, information, travel, labor and/or other participant provided services.

[23] MINEX Report NIST IR 7296 PDF is here: http://fingerprint.nist.gov/minex04/minex_report.pdf

The Government is not bound or obligated to follow any recommendations that may be submitted by the Participant. The United States Government, or any individual agency, is not bound, nor is it obligated, in any way to give any special consideration to MINEX II Participants on future contracts, grants or other activities.

With the signing of this form, Participants realize that any test details and/or modifications that are provided in the MINEX II website supersede the information on this form.

With the signing of this form, Participants realize that they can withdraw from the MINEX II at any time prior to the start of Phase 1, without their participation and withdrawal being documented in the MINEX II Final Report.

This form shall be completed by all suppliers of ISO/IEC 7816 cards and providers of fingerprint technology electing to participate in the MINEX II trials. When more than one supplier is part of a team to provide an implementation, a Responsible Party from each party shall complete an executed copy of this agreement.		
Card identifier (identical to value returned in sec. 8.8)	Fingerprint matcher identifier (identical to value returned in sections 8.9 and 9.4.4)	Fingerprint template generator identifier (identical to that return in sec. 9.4.4) – if supplied.
Hex Vendor ID	Hex Vendor ID (IBIA assigned)	Hex Vendor ID (IBIA assigned)
Hex vendor assigned version no.	Hex vendor assigned version no.	Hex vendor assigned version no.

Responsible Party for supplier of smart card				
Company / Organization Name				
Title	First Name	MI	Last Name	Suffix
Street Address				
City	State	Zip	Country	
Phone	Fax	Email		
Technical point of contact	Phone	Email		

Responsible Party for supplier of fingerprint matcher technology (i.e. any algorithms present on the card or in the SDK library).				
Company / Organization Name				
Title	First Name	MI	Last Name	Suffix
Street Address				
City	State	Zip	Country	
Phone	Fax	Email		
Technical point of contact	Phone	Email		

Responsible Party for supplier of fingerprint minutiae template generator technology (i.e. any algorithms present in the SDK library).				
Company / Organization Name				
Title	First Name	MI	Last Name	Suffix

Street Address				
City		State	Zip	Country
Phone	Fax		Email	
Technical point of contact	Phone		Email	

With my signature, I agree that this document is a sufficient description of the test to be conducted.

With my signature, I hereby request consideration as a Participant in the Minutia Interoperability Exchange Test II (MINEX II), and I am authorizing my company or organization to participate in MINEX II according to the rules and limitations listed in this document.

With my signature, I also state that I have the authority to accept the terms stated in this document

_____

SIGNATURE OF CARD SUPPLIER RESPONSIBLE PARTY DATE

_____

SIGNATURE OF FIRST FINGERPRINT SOFTWARE SUPPLIER RESPONSIBLE PARTY DATE

_____

SIGNATURE OF SECOND FINGERPRINT SOFTWARE SUPPLIER RESPONSIBLE PARTY DATE

Annex I
NIST mailing address

The address given below shall be used for all mail or courier delivery to NIST. This includes delivery of MINEX II participation agreements and all MINEX II cards and software.

MINEX II Test Liaison
National Institute of Standards and Technology
Information Access Division (894)
100 Bureau Drive, Stop 8940
Gaithersburg, MD 20899-8940
USA

In cases where the courier needs a phone number please use NIST S+H 301 nine seven five six two nine six.